Now with
SKF factory
pre-lubrication

Linear bearings and units



The SKF® brand now stands for more than ever before, and means more to you as a valued customer.

While SKF maintains its leadership as the hallmark of quality bearings throughout the world, new dimensions in technical advances, product support and services have evolved SKF into a truly solutions-oriented supplier, creating greater value for customers.

These solutions encompass ways to bring greater productivity to customers, not only with breakthrough application-specific products, but also through leading-edge design simulation tools and consultancy services, plant asset efficiency maintenance programmes, and the industry's most advanced supply management techniques.

The SKF brand still stands for the very best in rolling bearings, but it now stands for much more.

SKF – the knowledge engineering company

Content

3 The SKF factory pre-lubrication standard

4 Product overview

8 Linear ball bearings, ISO series 1
9 LBBR

10 Linear plain bearings, ISO series 1
11 LPBR

12 Linear bearing units, ISO series 1
14 LUHR / LUJR
15 LTBR
16 LTDR
17 LQBR

18 Linear ball bearings, ISO series 3
20 LBCR
21 LBCD
22 LBCT
23 LBHT
24 LBCF

27 Linear plain bearings, ISO series 3
28 LPAR / LPAT

29 Linear bearing units, ISO series 3
31 LUCR / LUCD
32 LUCS / LUCE
33 LUCT / LUCF
34 LUCT ... BH
35 LUND
36 LUNE
37 LUNF
38 LVCR
39 LTCD
40 LTCF
41 LQCR / LQCD
42 LQCF

43 Shaft carriers / shaft blocks
44 LSCS
45 LSNS / LSHS
46 LEAS / LEBS
47 LRCB / LRCC

48 Quadro linear tables, non-driven
49 LZBU
51 LZAU

52 Precision shafts

The SKF factory pre-lubrication standard

SKF now offers pre-lubricated linear bearings as a standard greased at the factory. The pre-lubricated bearings will save assembly time by eliminating the need to grease the bearings. Due to factory calibrated grease fill, the reliability of the bearing will be improved. Using pre-lubricated bearings will reduce maintenance costs as well.

SKF linear ball bearings and units for shaft diameter 6 mm and greater are factory pre-lubricated[1)] by default[2)]. Due to the integrated grease reservoir and the use of SKF double-lip seals (2LS), most applications will not require relubrication because the theoretical relubrication interval exceeds the bearing life.

The linear bearings are lubricated with the high-performance SKF grease LGEP2.

Our technical support as well as the technical handbook for linear bearings and units (order number 6402 EN or download at www.linear-motion.skf.com) are available for further questions on the factory pre-lubrication.

Sealing

The double-lip seal ensures maintenance-free life for pre-lubricated bearings that operate under standard conditions. The integral seal has been designed specifically for linear bearings. The seal lips maintain full contact with the shaft while offering a superior sealing solution even when used with the shaft for the self-aligning linear bearings of the LBC series. The seals have also been optimized for low friction operation.

Lubricant

LGEP2 is an extreme pressure bearing grease from SKF for a wide range of industrial and automotive applications. Based on a lithium soap/mineral oil, the additives provide a good corrosion resistance and anti-wear protection. Special greases for food, clean room or high temperature environments are available upon request.

The double-lip sealing



[1)] as from July 2007
[2)] linear ball bearings without factory pre-lubrication and preservative only can be ordered by using the suffix "/VT808", e.g. LBCR 20 A-2LS/VT808

Product overview - Linear bearings and units - Standard range

This catalogue covers SKF linear ball bearings, linear plain bearings and accessories that can be used to construct economic and simple linear guidance systems for a wide variety of applications. In cases where, for example, load conditions are such that these bearings and units cannot be used, other SKF linear guidance products and systems are available. For additional information regarding these other products and systems, contact your local SKF representative.

This publication includes series 1 and 3 linear ball bearings, manufactured to ISO 10285 and linear plain bearings with the same dimensions.

Series 1 linear ball bearings and units
Linear ball bearings (LBBR) in series 1 are compact and easy to mount. These bearings with or without seals are available in a standard version as well as a corrosion resistant version. Linear ball bearing units in this series, which include a bearing and housing, are available as single, or tandem units. Tandem units include duo and quadro versions.

Series 3 linear ball bearings and units
Series 3 linear ball bearings include the advanced cylindrical LBCR and LBCT design, the self-aligning LBCD and LBCF design and the LBHT design with extra high load carrying capacity. Any of the bearings in the ISO series 3 are available in a standard and corrosion resistant version, with an integral double lip seal to provide maintenance-free operation under normal conditions. These linear ball bearings are interchangeable with all former SKF series 3 bearings.

Most series 3 linear bearing units are fitted as standard with self-aligning linear ball bearings to accommodate misalignment. Other designs are also available and can be found in the appropriate tables.

Series 3 linear plain bearings and units
LPAR and LPAT linear plain bearings are included in the series 3 size range.

NOTE: SKF linear ball bearings are coated with a corrosion inhibiting preservative. Before mounting non pre-greased linear bearings should be suitably lubricated.

Linear ball bearings

	Type	Size (mm)	Max load (N) dynamic / static	Comments	ISO series	Page No.
	LBBR	3 to 50	6 950 / 6 300		1	9
	LBCR	5 to 80	37 500 / 32 000		3	20
	LBCD	12 to 50	11 200 / 6 950	Self-aligning *	3	21
	LBCT	12 to 80	37 500 / 32 000		3	22
	LBCF	12 to 50	11 200 / 6 950	Self-aligning *	3	24
	LBHT	20 to 50	17 300 / 17 000		3	23

* Automatic compensation of shaft misalignments of up to max. ±30 angular minutes.

Product overview - Linear bearings and units - Standard range

Linear plain bearings

	Type	Size (mm)	Max load (N) dynamic / static	Comments	ISO series	Page No.
	LPBR	12 to 50	10 800 / 38 000		1	11
	LPAR	5 to 80	29 000 / 100 000		3	28
	LPAT	12 to 80	29 000 / 100 000		3	28

Linear bearing units

	LUHR	12 to 50	6 950 / 6 300	LBBR bearing	1	14
	LUJR	12 to 50	6 950 / 6 300	With shaft seals LBBR bearing	1	14
	LTBR	12 to 50	11 400 / 12 700	Tandem LBBR bearing	1	15
	LTDR	12 to 50	11 400 / 12 700	Duo LBBR bearing	1	16
	LQBR	12 to 50	18 600 / 25 500	Quadro LBBR bearing	1	17
	LUCR	8, 60, 80	37 500 / 32 000	LBCR bearing	3	31
	LUCD	12 to 50	11 200 / 6 950	LBCD bearing Self-aligning *	3	31

* Automatic compensation of shaft misalignments of up to max. ±30 angular minutes.

Product overview - Linear bearings and units - Standard range

Linear bearing units

	Type	Size (mm)	Max load (N) dynamic / static	Comments	ISO series	Page No.
	LUCS	8, 60, 80	37 500 / 32 000	LBCR bearing	3	32
	LUCE	12 to 50	11 200 / 6 950	LBCD bearing Self-aligning *	3	32
	LUCT	60, 80	37 500 / 32 000	LBCT bearing	3	33
	LUCF	12 to 50	11 200 / 6 950	LBCF bearing Self-aligning *	3	33
	LUCT ... BH	20 to 50	17 300 / 17 000	LBHT bearing	3	34
	LUND	12 to 50	11 200 / 6 950	LBCD bearing Self-aligning *	3	35
	LUNE	12 to 50	11 200 / 6 950	LBCD bearing Self-aligning *	3	36
	LUNF	12 to 50	11 200 / 6 950	LBCF bearing Self-aligning *	3	37
	LVCR	12 to 80	37 500 / 32 000	LBCR bearing	3	38
	LTCD	12 to 50	18 300 / 14 000	Tandem LBCD bearing Self-aligning *	3	39
	LTCF	12 to 50	18 300 / 14 000	Tandem LBCF bearing Self-aligning *	3	40

* Automatic compensation of shaft misalignments of up to max. ±30 angular minutes.

Product overview - Linear bearings and units - Standard range

Linear bearing units

	Type	Size (mm)	Max load (N) dynamic / static	Comments	ISO series	Page No.
	LQCR	8	1 290 / 1 420	Quadro LBCR bearing	3	41
	LQCD	12 to 50	30 000 / 28 000	Quadro LBCD bearing Self-aligning *	3	41
	LQCF	12 to 50	30 000 / 28 000	Quadro LBCF bearing Self-aligning *	3	42
Shaft blocks						
	LSCS	8 to 80			1 / 3	44
	LSHS LSNS	12 to 50		LSHS ISO 1 LSNS ISO 3	1 / 3	45
	LEBS A LEAS ... A/B	12 to 50 8 to 50		Tandem LEBS A ISO 1 LEAS A/B ISO 3	1 / 3	46
Shafts and shaft supports						
	LJ ...	3 to 80			1 / 3	53
	LRCB LRCC	12 to 80		LRCB (holes) LRCC (no holes)	3	47
Linear tables						
	LZAU	12 to 50		Quadro “supported shaft” LBCF bearing	3	51
	LZBU ... A LZBU ... B	8 to 50		Quadro “A” = “moving unit” “B” = “moving shafts” LBCD bearing	3	49 50

* Automatic compensation of shaft misalignments of up to max. ±30 angular minutes.

LBBR linear ball bearings

The LBBR is a patented SKF linear ball bearing that combines a plastic cage with hardened steel raceway segments to guide the ball sets. The bearing conforms to dimension series 1 according to ISO 10285.

The LBBR raceway segments have been designed to fully utilize the entire length of the load zone to increase bearing capacity and extend bearing service life.

The plastic cage has been redesigned to provide optimum performance. All ball recirculations are designed to offer no resistance to the cage on the running-in and runout of the recirculation. The redesigned cage also accommodates larger balls to provide increased load capacity and service life.

The sealed variant is fitted with integral double lip seals. These seals have an inner lip to keep lubricant in the bearing; the outer lip acts like a wiper seal to keep contaminants out of the bearing.

Unsealed bearings are fitted with non-contacting shields to protect the bearing from large contaminant particles. LBBR linear ball bearings do not need to be secured axially in the housing provided the housing bore is sized correctly.

Stainless steel variant

LBBR linear ball bearings are also available with stainless steel balls and raceways for wet or corrosive environments. The stainless steel variant is identified by a HV6 suffix in the designation, e.g. LBBR 16-2LS/HV6. When used in combination with SKF stainless steel shafts, it is possible to create a guidance system made entirely of stainless steel.



Linear ball bearings – LBBR
- with raceway plates

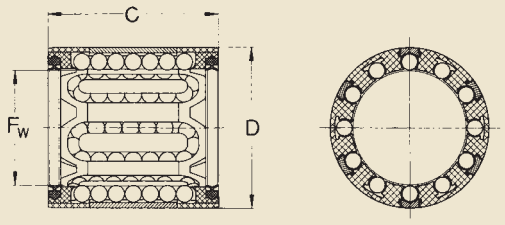

LBBR with double lip seals

Dimensions			No. of ball rows	Basic load ratings		Mass	Designations			
							Linear ball bearings		stainless steel	
				dyn.	stat.		standard	with 2 double	standard	with 2 double
F_w	D	C		C	C_0		design	lip seals	design	lip seals
mm			—	N		kg	—			
3	7	10	4	60	44	0,0007	LBBR 3[2]	LBBR 3-2LS[2]	LBBR 3/HV6[2]	LBBR 3-2LS/HV6[2]
4	8	12	4	75	60	0,001	LBBR 4[2]	LBBR 4-2LS[2]	LBBR 4/HV6[2]	LBBR 4-2LS/HV6[2]
5	10	15	4	170	129	0,002	LBBR 5[2]	LBBR 5-2LS[2]	LBBR 5/HV6[2]	LBBR 5-2LS/HV6[2]
6	12	22[1]	4	335	270	0,006	LBBR 6A	LBBR 6A-2LS	LBBR 6A/HV6	LBBR 6A-2LS/HV6
8	15	24	4	490	355	0,007	LBBR 8	LBBR 8-2LS	LBBR 8/HV6	LBBR 8-2LS/HV6
10	17	26	5	585	415	0,011	LBBR 10	LBBR 10-2LS	LBBR 10/HV6	LBBR 10-2LS/HV6
12	19	28	5	695	510	0,012	LBBR 12	LBBR 12-2LS	LBBR 12/HV6	LBBR 12-2LS/HV6
14	21	28	5	710	530	0,013	LBBR 14	LBBR 14-2LS	LBBR 14/HV6	LBBR 14-2LS/HV6
16	24	30	5	930	630	0,018	LBBR 16	LBBR 16-2LS	LBBR 16/HV6	LBBR 16-2LS/HV6
20	28	30	6	1 160	800	0,021	LBBR 20	LBBR 20-2LS	LBBR 20/HV6	LBBR 20-2LS/HV6
25	35	40	7	2 120	1 560	0,047	LBBR 25	LBBR 25-2LS	LBBR 25/HV6	LBBR 25-2LS/HV6
30	40	50	8	3 150	2 700	0,070	LBBR 30	LBBR 30-2LS	LBBR 30/HV6	LBBR 30-2LS/HV6
40	52	60	8	5 500	4 500	0,130	LBBR 40	LBBR 40-2LS	LBBR 40/HV6	LBBR 40-2LS/HV6
50	62	70	9	6 950	6 300	0,18	LBBR 50	LBBR 50-2LS	LBBR 50/HV6	LBBR 50-2LS/HV6

The outside diameter tolerance of the linear ball bearings is such that no additional axial fixation is required when the bearings are fitted into a bore with a tolerance of J7 or J6.

Accessories for LBBR (shaft seals)

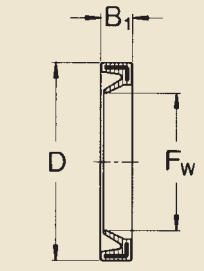

SP

Appropriate special seals Dimensions			Designations
F_w	D	B_1	
mm	—		
6	12	2	SP-6x12x2
8	15	3	SP-8x15x3
10	17	3	SP-10x17x3
12	19	3	SP-12x19x3
14	21	3	SP-14x21x3
16	24	3	SP-16x24x3
20	28	4	SP-20x28x4

Appropriate special seals Dimensions			Designations
F_w	D	B_1	
mm	—		
25	35	4	SP-25x35x4
30	40	4	SP-30x40x4
40	52	5	SP-40x52x5
50	62	5	SP-50x62x5

[1] Width 22 does not correspond to series 1 in ISO standard 10285.
[2] not factory pre-lubricated

Linear plain bearings, ISO series 1

LPBR linear plain bearings, which have the same dimensions as LBBR linear ball bearings, are made out of PAS-LX (Copolymeres Polyoxymethylen) with a special polyethylene to provide smooth, stick-slip-free operation. These linear plain bearings are self lubricating under normal conditions and require minimal maintenance. They have a high static load carrying capacity and are resistant to shock loads.

SKF recommends a light coating of lubricant during installation to improve the performance during the running-in period even if the bearings are to be used "lubricant-free".

LPBR linear plain bearings are intended for applications where there are heavy shock loads and/or vibrations or high accelerations and speeds when the bearing is unloaded. Under these operating conditions linear plain bearings provide longer service life than linear ball bearings. However, increased friction must be expected.



Linear plain bearings – LPBR
- closed design

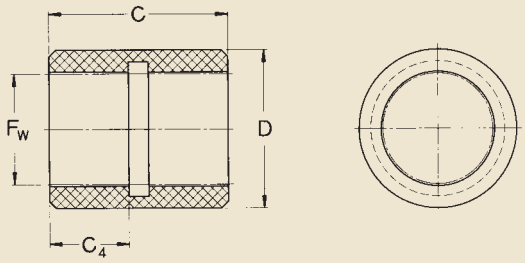

LPBR

Dimensions				Basic load ratings dyn. at 0,1 m/s	4 m/s	stat.	Mass	Designation Linear plain bearing
F_w	D -0,07	C	C_4	C	C	C_0		
mm				N			kg	—
12	19,19	28	10	965	24	3 350	0,006	**LPBR 12**
16	24,23	30	12	1 530	38	5 400	0,009	**LPBR 16**
20	28,24	30	13	2 080	52	7 350	0,011	**LPBR 20**
25	35,25	40	17	3 400	85	12 000	0,024	**LPBR 25**
30	40,27	50	20	4 800	120	17 000	0,033	**LPBR 30**
40	52,32	60	24	7 650	193	27 000	0,063	**LPBR 40**
50	62,35	70	27	10 800	270	38 000	0,088	**LPBR 50**

The outside diameter tolerance of the linear plain bearings is such that no additional axial fixation is required when the bearings are fitted into a bore with a tolerance of J7 or J6.

Accessories for LPBR (shaft seals)

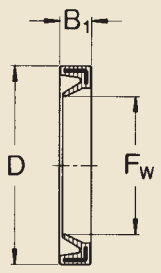

SP

Appropriate special seals Dimensions			Designations
F_w	D	B_1	
mm	—		
12	19	3	SP-12x19x3
16	24	3	SP-16x24x3
20	28	4	SP-20x28x4

Appropriate special seals Dimensions			Designations
F_w	D	B_1	
mm	—		
25	35	4	SP-25x35x4
30	40	4	SP-30x40x4
40	52	5	SP-40x52x5
50	62	5	SP-50x62x5

Linear bearing units, ISO series 1

Linear bearing units incorporating closed ISO series 1 bearings are available for applications where the shaft is only supported at each end. These cost-effective bearing units are extremely compact and can accommodate loads exceeding 25 000 N (e.g. LQBR 50-2LS; see also page 17).

The maximum permissible angular misalignment is 15 minutes of arc. When fitted with double lip seals, LBBR bearings enable these units to operate without relubrication, under normal operating conditions (see page 3).

For corrosive or wet environments, SKF recommends stainless steel shafting and either aluminium housings with stainless steel linear ball bearings e.g. LBBR 20-2LS/HV6 or aluminium housings fitted with plain bearings.

Shafting cut to length is available. For additional information, see the chapter “Precision shafts”, page 52.

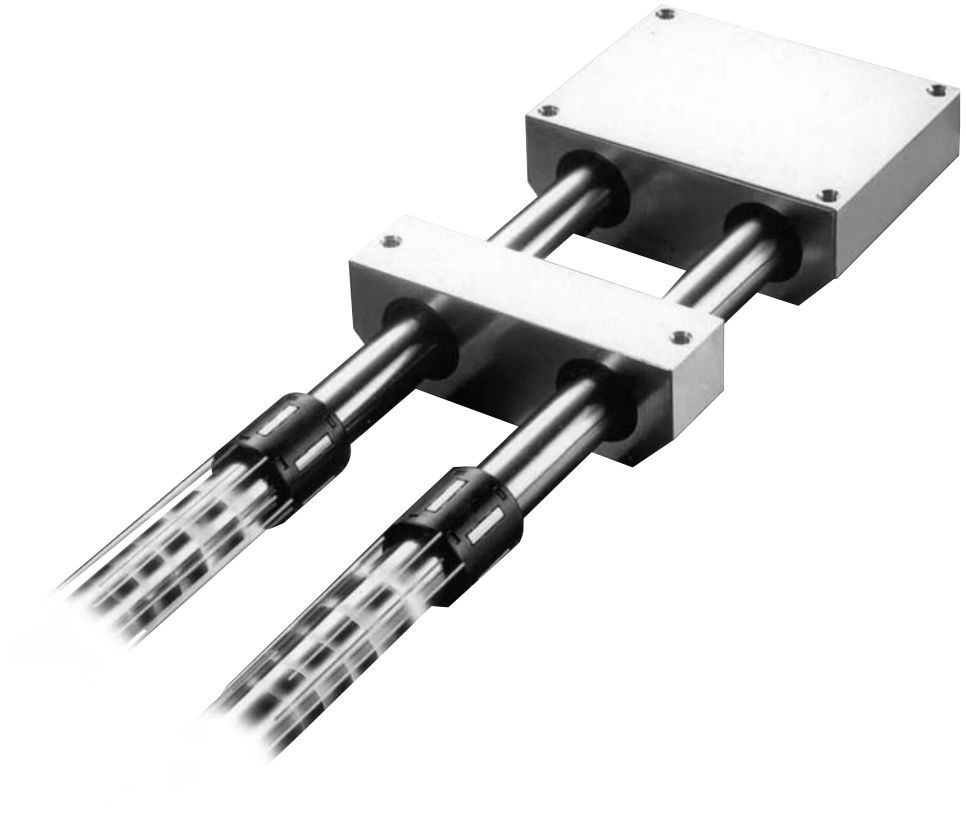

LUHR/LUJR linear bearing units consist of a housing of extruded aluminium and the compact LBBR linear ball bearing or the LPBR linear plain bearing of similar dimensions. The LUHR design, for shaft diameters from 12 to 50 mm, is available fitted as standard with LBBR linear ball bearings with or without integrated seals or with LPBR linear plain bearings (designation LUHR ... PB).

For highly contaminated environments, extended LUJR linear bearing units are available. These incorporate LBBR linear ball bearings and two SP-type shaft seals. LUHR and LUJR linear bearing units cannot be relubricated.

LTBR tandem linear bearing units consist of a one-piece extruded aluminium housing and two LBBR linear ball bearings mounted one behind the other. These units are fitted with sealed bearings as standard and cannot be relubricated. They are particularly suitable for tables or slides of any width.

LTDR duo linear bearing units are characterised by an aluminium housing that contains two LBBR-2LS linear ball bearings in parallel. The space between the two bearings and the duo configuration permits easy fitting of a linear drive.

LQBR quadro linear bearing units – contain four (4) LBBR linear ball bearings within a sealed aluminium housing. The duo configuration and the space between the bearings permit the fitting of a linear drive. Duo and quadro linear bearing units based on LBBR linear ball bearings can be used to make compact, simple table configurations. For suitable shaft blocks (LEBS), see page 46.



Linear bearing units – LUHR/LUJR
- with closed housing and LBBR linear ball bearings

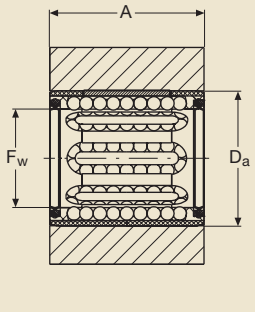

LUHR
With double lip seals

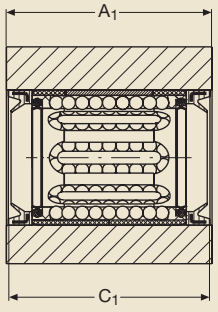

LUJR
With shaft seals

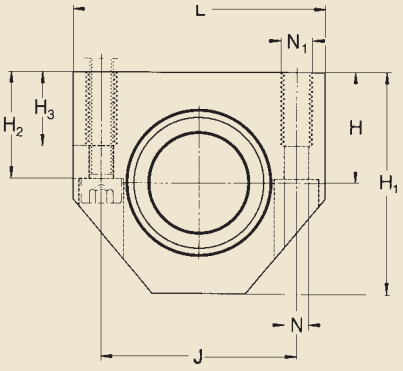

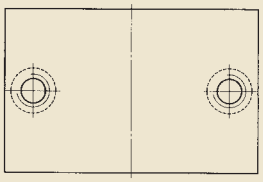

Dimensions													Basic load ratings		Mass		Designations		
															Design		Linear bearing unit		
F_w	A	A_1	C_1	D_a	H ±0,01	H_1	H_2	H_3	L	J	$N^{1)}$	$N_1{}^{1)}$	dyn. C	stat. C_0	LUHR	LUJR	without seal	with double lip seal	with shaft seals
mm												—	N		kg				
12	28	35	34	19	17	33	16	11	40	29	4,3	M 5	695	510	0,08	0,10	**LUHR 12**	**LUHR 12-2LS**	**LUJR 12**
16	30	37	36	24	19	38	18	11	45	34	4,3	M 5	930	630	0,10	0,12	**LUHR 16**	**LUHR 16-2LS**	**LUJR 16**
20	30	39	38	28	23	45	22	13	53	40	5,3	M 6	1 160	800	0,14	0,18	**LUHR 20**	**LUHR 20-2LS**	**LUJR 20**
25	40	49	48	35	27	54	26	18	62	48	6,6	M 8	2 120	1 560	0,25	0,30	**LUHR 25**	**LUHR 25-2LS**	**LUJR 25**
30	50	59	58	40	30	60	29	18	67	53	6,6	M 8	3 150	2 700	0,37	0,44	**LUHR 30**	**LUHR 30-2LS**	**LUJR 30**
40	60	71	70	52	39	76	38	22	87	69	8,4	M 10	5 500	4 500	0,74	0,86	**LUHR 40**	**LUHR 40-2LS**	**LUJR 40**
50	70	81	80	62	47	92	46	26	103	82	10,5	M 12	6 950	6 300	1,19	1,37	**LUHR 50**	**LUHR 50-2LS**	**LUJR 50**

For suitable shaft blocks for these bearing units, designation LSHS, see page 45.

Linear bearing units of the LUHR design are also available fitted with LPBR linear plain bearings.
Designations: e. g. LUHR 20 PB.

[1)] For screws with internal hexagon to DIN 912 / ISO 4762.

Tandem linear bearing units – LTBR
- with closed housing and LBBR linear ball bearings

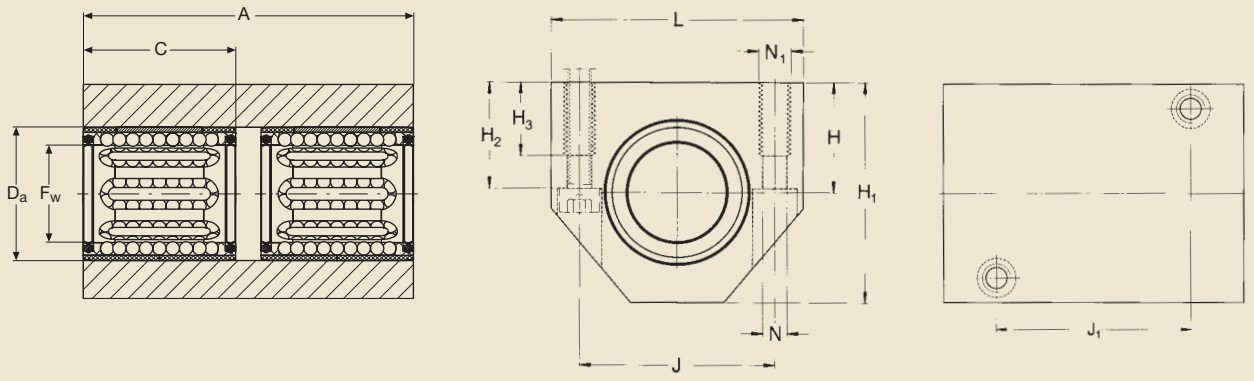

LTBR
With double lip seals on the outside

Dimensions													Basic load ratings		Mass	Designations
													dyn.	stat.		Linear bearing unit with double lip seals
F_w	A	C	D_a	H ±0,01	H_1	H_2	H_3	J	J_1	L	$N^{1)}$	$N_1^{1)}$	C	C_0		
mm												—	N		kg	
12	60	28	19	17	33	16	11	29	35	40	4,3	M 5	1 140	1 020	0,17	**LTBR 12-2LS**
16	65	30	24	19	38	18	11	34	40	45	4,3	M 5	1 530	1 270	0,22	**LTBR 16-2LS**
20	65	30	28	23	45	22	13	40	45	53	5,3	M 6	1 900	1 600	0,31	**LTBR 20-2LS**
25	85	40	35	27	54	26	18	48	55	62	6,6	M 8	3 450	3 150	0,54	**LTBR 25-2LS**
30	105	50	40	30	60	29	18	53	70	67	6,6	M 8	5 200	5 400	0,80	**LTBR 30-2LS**
40	125	60	52	39	76	38	22	69	85	87	8,4	M 10	9 000	9 000	1,57	**LTBR 40-2LS**
50	145	70	62	47	92	46	26	82	100	103	10,5	M 12	11 400	12 700	2,51	**LTBR 50-2LS**

For suitable shaft blocks for these bearing units, designation LSHS, see page 45.

[1)] For screws with internal hexagon to DIN 912 / ISO 4762.

Duo linear bearing units – LTDR
- with closed housing and LBBR linear ball bearing

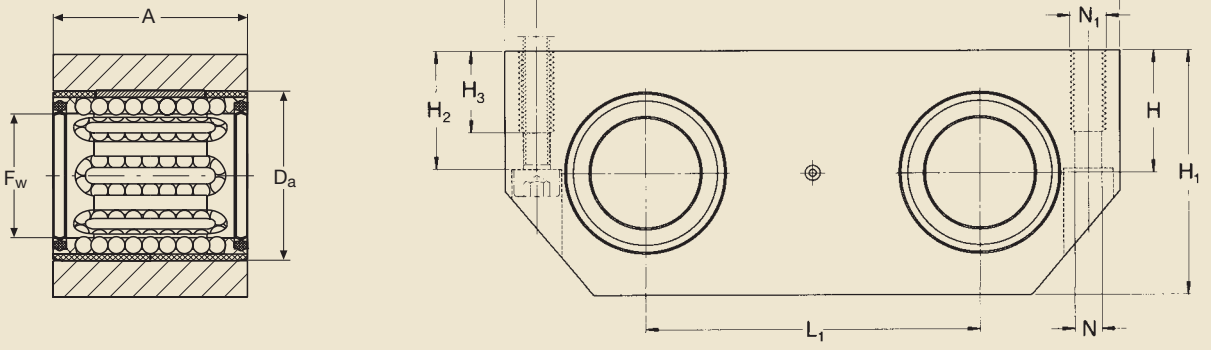

LTDR
With double lip seals

Dimensions												Basic load ratings		Mass	Designations
												dyn	stat.		Linear bearing unit with double lip seals
F_w	A	D_a	H ±0,01	H_1	H_2	H_3	J	L	L_1	$N^{1)}$	$N_1^{1)}$	C	C_0		
mm											—	N		kg	—
12	28	19	15	30	14	11	69	80	40	4,3	M 5	1 140	1 020	0,15	**LTDR 12-2LS**
16	30	24	17,5	35	16,5	11	86	96	52	4,3	M 5	1 530	1 270	0,22	**LTDR 16-2LS**
20	30	28	20	40	19	13	103	115	63	5,3	M 6	1 900	1 600	0,30	**LTDR 20-2LS**
25	40	35	25	50	24	18	123	136	75	6,6	M 8	3 450	3 150	0,58	**LTDR 25-2LS**
30	50	40	28	56	27	18	133	146	80	6,6	M 8	5 200	5 400	0,85	**LTDR 30-2LS**
40	60	52	35	70	34	22	166	184	97	8,4	M 10	9 000	9 000	1,56	**LTDR 40-2LS**
50	70	62	40	80	39	26	189	210	107	10,5	M 12	11 400	12 700	2,21	**LTDR 50-2LS**

For suitable shaft blocks for these bearing units, short designation LEBS ... A, see page 46.

[1)] For screws with internal hexagon to DIN 912 / ISO 4762 at the centre (0,5 A) of the linear bearing unit.

Quadro linear bearing units – LQBR
- with closed housing and LBBR linear ball bearing

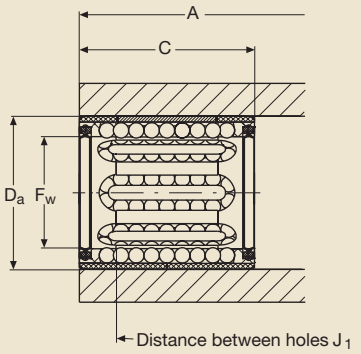

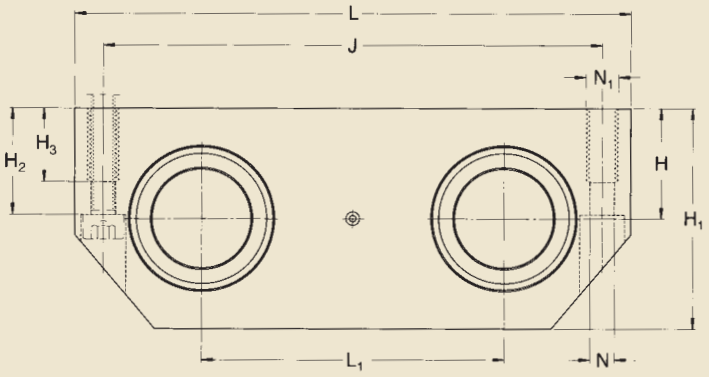

LQBR
With double lip seals on the outside

Dimensions														Basic load ratings dyn.	stat.	Mass	Designations Linear ball baring unit with double lip seals
F_w	A	C	D_a	H ±0,01	H_1	H_2	H_3	J	J_1	L	L_1	$N^{1)}$	$N_1{}^{1)}$	C	C_0		
mm													—	N		kg	—
12	70	28	19	15	30	14	11	69	59	80	40	4,3	M 5	1 860	2 040	0,38	**LQBR 12-2LS**
16	80	30	24	17,5	35	16,5	11	86	70	96	52	4,3	M 5	2 500	2 550	0,57	**LQBR 16-2LS**
20	85	30	28	20	40	19	13	103	73	115	63	5,3	M 6	3 100	3 200	0,82	**LQBR 20-2LS**
25	100	40	35	25	50	24	18	123	87	136	75	6,6	M 8	5 600	6 300	1,43	**LQBR 25-2LS**
30	130	50	40	28	56	27	18	133	117	146	80	6,6	M 8	8 500	10 800	2,15	**LQBR 30-2LS**
40	150	60	52	35	70	34	22	166	132	184	97	8,4	M 10	14 600	18 000	3,83	**LQBR 40-2LS**
50	175	70	62	40	80	39	26	189	154	210	107	10,5	M 12	18 600	25 500	5,40	**LQBR 50-2LS**

For suitable shaft blocks for these bearing units, designation LEBS ... A, see page 46.

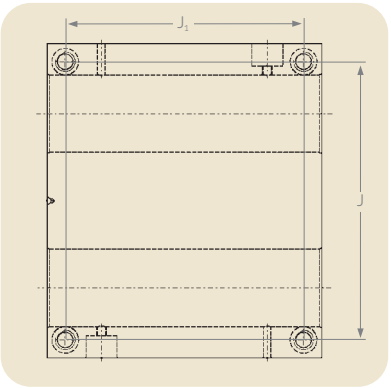

[1)] For 4 screws with internal hexagon to DIN 912 / ISO 4762.

Linear ball bearings, ISO series 3

LBC linear ball bearings, with their high load carrying capacity, are available for shaft diameters from 5 to 80 mm. As with all SKF linear ball bearings, they are available with a choice of seals or shields. 5 and 8 mm LBC linear ball bearings that are full contained within their housings, are self-retaining so that no additional axial location is required under normal operating conditions.

All LBC linear ball bearings are generally designed for grease lubrication. Sizes from 12-80 mm feature cages with a through-bored radial hole to accommodate a grease fitting, which provides longitudinal and axial fixation. Grease may be applied directly to the shaft or bearing via this hole. For the relubrication of LBHT linear ball bearings the housing must be provided with a grease distribution channel in the bore or housing. The grease is then forced onto the raceway between the load carrying plates. Information on the location of these attachment holes and grease fittings is shown on pages 25 and 26.

Stainless steel variant
LBC linear ball bearings are also available with stainless steel balls and raceways for wet or corrosive environments. The stainless steel variant is identified by adding a HV6 suffix to the designation e.g. LBCR 16-2LS/HV6. When used in combination with SKF stainless steel shafts, it is possible to create a guidance system made entirely of stainless steel.

LBCR linear ball bearings consist of a cage and raceway segments to guide the balls and either seals or shields. By virtue of their exceptionally long track length and the machined raceway osculation, they are able to accommodate heavy loads. LBCR linear ball bearings, with their optimised raceway segments and position for maximum load carrying capacity, can be mounted in closed as well as adjustable housings. When these bearings are mounted in a closed housing, the tolerance of the inscribed diameter of the ball set and hence the operating clearance is determined by the tolerance of the housing bore. When mounted in slotted housings the linear guides can be adjusted to provide either operating clearance or preload depending on the needs of the application. LBCR linear ball bearings must be located in the axial direction, for example via the grease fitting or a fixation pin.



LBCD linear ball bearings are a variant of the LBCR design. The primary feature of this bearing is its self-aligning capability that accommodates tilting of the whole bearing through an angle of ±30 minutes of arc. This tilting feature compensates for misalignment, which may be caused by inaccuracies in fitting or manufacturing (housing bore diameter), or by significant bending of an unsupported shaft. The self-aligning feature cannot, however, compensate for two non-parallel shafts in an assembly. The cage, seals and shields have been optimized to accommodate the self aligning feature so that the bearing and especially the shields or seals remain concentric with the shaft.

All other characteristics of the LBCR linear ball bearings are also valid for the self-aligning LBCD design. LBCD linear ball bearings must always be firmly fixed in the axial direction.

LBCT and LBHT linear ball bearings are used in applications where several shaft supports, or a continuous shaft support is needed to prevent shaft bending. Due to the open design of the LBCT bearing, one raceway segment is eliminated. However, this does not have a significant effect on its load carrying capacity. The raceway segments of the LBHT however, have been optimized so that it has the same number of raceway segments as a closed design bearing.

Both the LBCT and the LBHT are available for shaft diameters ranging from 20 to 50 mm. Unlike other open design linear ball bearings, these bearings feature a shoulder in the cage on each side of the opening which acts like a gap-type seal. Open designed LBCT/LBHT linear ball bearings must always be fixed to prevent axial and turning movements.

LBCF linear ball bearings are a self-aligning version of the LBCT design. These bearings are available in sizes ranging from 12 to 50 mm. LBCF linear ball bearings must always be fixed to prevent axial and turning movements.

Linear ball bearings – LBCR
- closed design

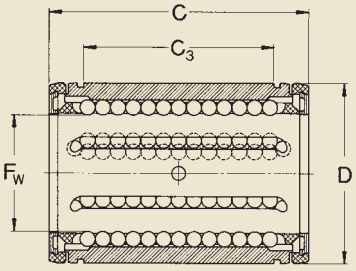

LBCR
With shields

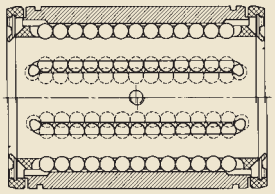

LBCR
With double lip seals

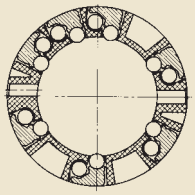

Dimensions				No. of ball rows	Basic load ratings		Mass	Designations Linear ball bearing with	
					dyn.	stat.		2 shields	2 double lip seals
F_w	D	C	C_3		C	C_0			
mm				—	N		kg		
5	12	22	12	4	280	210	0,005	LBCR 5[1]	LBCR 5- 2LS[1]
8	16	25	14	4	490	355	0,009	LBCR 8	LBCR 8- 2LS
12	22	32	20	6	1 160	980	0,016	LBCR 12 A	LBCR 12 A-2LS
16	26	36	22	6	1 500	1 290	0,021	LBCR 16 A	LBCR 16 A-2LS
20	32	45	28	7	2 240	2 040	0,043	LBCR 20 A	LBCR 20 A-2LS
25	40	58	40	7	3 350	3 350	0,085	LBCR 25 A	LBCR 25 A-2LS
30	47	68	48	7	5 600	5 700	0,13	LBCR 30 A	LBCR 30 A-2LS
40	62	80	56	7	9 000	8 150	0,26	LBCR 40 A	LBCR 40 A-2LS
50	75	100	72	7	13 400	12 200	0,46	LBCR 50 A	LBCR 50 A-2LS
60	90	125	95	7	20 400	18 000	0,82	LBCR 60 A	LBCR 60 A-2LS
80	120	165	125	7	37 500	32 000	1,9	LBCR 80 A	LBCR 80 A-2LS

Upon request these bearings are available in stainless steel execution.
Designation: e.g. LBCR 20 A-2LS/HV6

Linear ball bearings with one seal are available on request.

[1] not factory pre-lubricated
For axial location and protection against relative motion see pages 25/26.

Linear ball bearings – LBCD
- self aligning and closed design

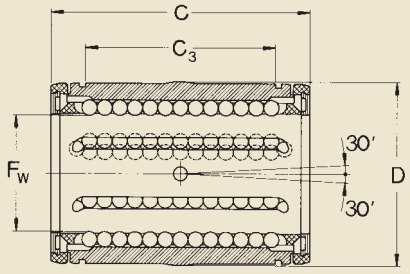

LBCD
With shields

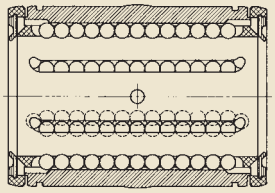

LBCD
With double lip seals

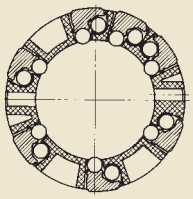

Dimensions				No. of ball rows	Basic load ratings		Mass	Designations	
					dyn.	stat		Linear ball bearings with 2 shields	2 double lip seals
F_w	D	C	C_3		C	C_0			
mm				—	N		kg		
12	22	32	20	6	1 080	815	0,015	**LBCD 12 A**	**LBCD 12 A-2LS**
16	26	36	22	6	1 320	865	0,020	**LBCD 16 A**	**LBCD 16 A-2LS**
20	32	45	28	7	2 000	1 370	0,042	**LBCD 20 A**	**LBCD 20 A-2LS**
25	40	58	40	7	2 900	2 040	0,083	**LBCD 25 A**	**LBCD 25 A-2LS**
30	47	68	48	7	4 650	3 250	0,13	**LBCD 30 A**	**LBCD 30 A-2LS**
40	62	80	56	7	7 800	5 200	0,26	**LBCD 40 A**	**LBCD 40 A-2LS**
50	75	100	72	7	11 200	6 950	0,44	**LBCD 50 A**	**LBCD 50 A-2LS**

Upon request these bearings are available in stainless steel execution.
Designation: e.g. LBCD 20 A-2LS/HV6

Linear ball bearings with one seal are available on request.

For axial location and protection against relative motion see pages 25/26.
Retaining rings according to DIN 471.

Linear ball bearings – LBCT
- open design

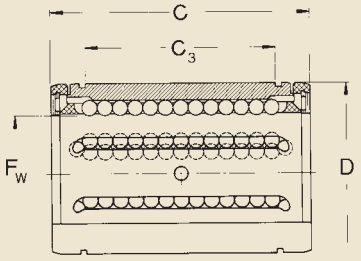

LBCT
With shields

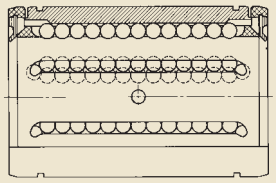

LBCT
With double lip seals

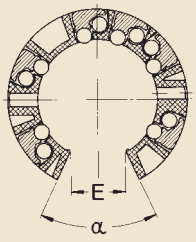

Dimensions						No. of ball rows	Basic load ratings		Mass	Designations	
							dyn.	stat.		Linear ball bearing with	
										2 shields	2 double lip seals
F_w	D	C	C_3	$E^{1)}$	α		C	C_0			
mm					Deg.	—	N		kg		
12	22	32	20	7,6	78	5	1 160	980	0,013	LBCT 12 A	LBCT 12 A-2LS
16	26	36	22	10,4	78	5	1 500	1 290	0,017	LBCT 16 A	LBCT 16 A-2LS
20	32	45	28	10,8	60	6	2 240	2 040	0,036	LBCT 20 A	LBCT 20 A-2LS
25	40	58	40	13,2	60	6	3 350	3 350	0,071	LBCT 25 A	LBCT 25 A-2LS
30	47	68	48	14,2	50	6	5 600	5 700	0,114	LBCT 30 A	LBCT 30 A-2LS
40	62	80	56	18,7	50	6	9 000	8 150	0,23	LBCT 40 A	LBCT 40 A-2LS
50	75	100	72	23,6	50	6	13 400	12 220	0,39	LBCT 50 A	LBCT 50 A-2LS
60	90	125	95	29,6	54	6	20 400	18 000	0,72	LBCT 60 A	LBCT 60 A-2LS
80	120	165	125	38,4	54	6	37 500	32 000	1,67	LBCT 80 A	LBCT 80 A-2LS

Upon request these bearings are available in stainless steel execution.
Designation: e.g. LBCT 20 A-2LS/HV6

Linear ball bearings with one seal are available on request.

[1)] Smallest sector width for diameter F_w. For axial location and protection against relative motion see pages 25/26.

Linear ball bearings – LBHT
- open design, for heavy duty

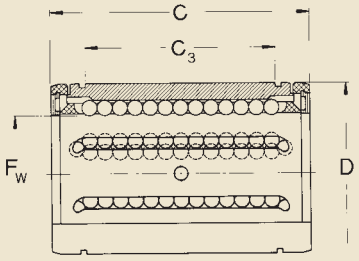

LBHT
With shields

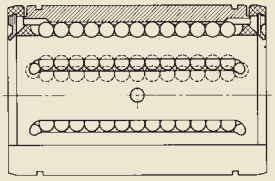

LBHT
With double lip seals

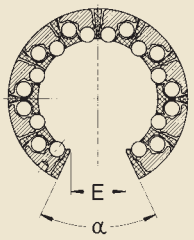

Dimensions						No. of ball rows	Basic load ratings		Mass	Designations	
							dyn.	stat.		Linear ball bearing with	
										2 shields	2 double lip seals
F_w	D	C	C_3	$E^{1)}$	α		C	C_0			
mm					Deg.	—	N		kg		
20	32	45	28	10,8	60	8	2 650	2 650	0,043	LBHT 20 A	LBHT 20 A-2LS
25	40	58	40	13,2	60	9	4 900	5 100	0,095	LBHT 25 A	LBHT 25 A-2LS
30	47	68	48	14,2	50	10	7 200	8 000	0,16	LBHT 30 A	LBHT 30 A-2LS
40	62	80	56	18,7	50	10	11 600	11 400	0,33	LBHT 40 A	LBHT 40 A-2LS
50	75	100	72	23,6	50	10	17 300	17 000	0,56	LBHT 50 A	LBHT 50 A-2LS

Upon request these bearings are available in stainless steel execution.
Designation: e.g. LBHT 20 A-2LS/HV6

Linear ball bearings with one seal are available on request.

[1)] Smallest sector width for diameter F_w. For axial location and protection against relative motion see pages 25/26.

Linear ball bearings – LBCF
- self-aligning and open design

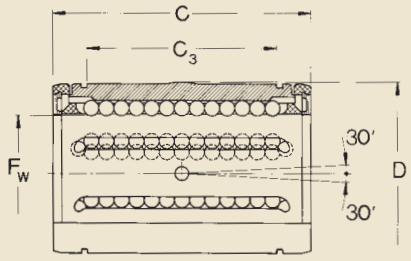

LBCF
With shields

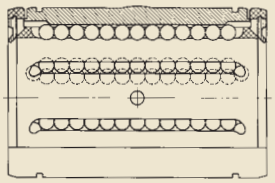

LBCF
With double lip seals

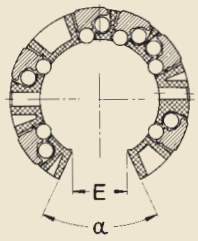

Dimensions						No. of ball rows	Basic load ratings		Mass	Designations Linear ball bearing with	
							dyn.	stat.		2 shields	2 double lip seals
F_w	D	C	C_3	$E^{1)}$	α		C	C_0			
mm					Deg.	—	N		kg		
12	22	32	20	7,6	78	5	1 080	815	0,012	LBCF 12 A	LBCF 12 A-2LS
16	26	36	22	10,4	78	5	1 320	865	0,016	LBCF 16 A	LBCF 16 A-2LS
20	32	45	28	10,8	60	6	2 000	1 370	0,035	LBCF 20 A	LBCF 20 A-2LS
25	40	58	40	13,2	60	6	2 900	2 040	0,07	LBCF 25 A	LBCF 25 A-2LS
30	47	68	48	14,2	50	6	4 650	3 250	0,011	LBCF 30 A	LBCF 30 A-2LS
40	62	80	56	18,7	50	6	7 800	5 200	0,22	LBCF 40 A	LBCF 40 A-2LS
50	75	100	72	23,6	50	6	11 200	6 950	0,37	LBCF 50 A	LBCF 50 A-2LS

Upon request these bearings are available in stainless steel execution.
Designation: e.g. LBCF 20 A-2LS/HV6

Linear ball bearings with one seal are available on request.

[1)] Smallest sector width for diameter F_w. For axial location and protection against relative motion see pages 25/26.

Axial and rotational fixation
- for LBC and LPA linear bearings

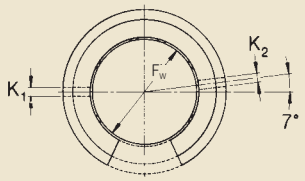

Design 1

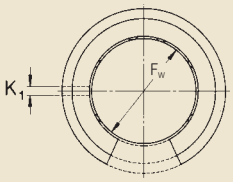

Design 2

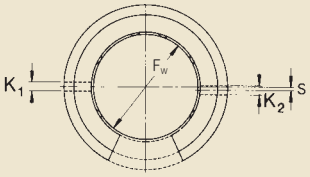

Design 3

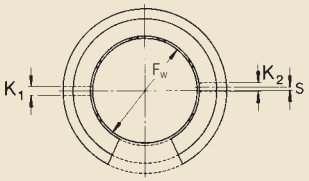

Design 4

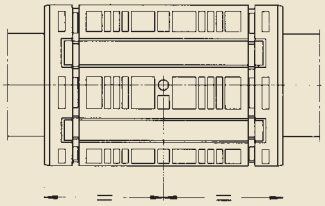

Dimensions				Design[1]	Appropriate grease nipples[2]	Grub screws[3]	Pins[4] Diameter
F_w	K_1	K_2	s				
mm				—			mm
5[6]	-	-	-	-	-	-	-
8[6]	-	-	-	-	-	-	-
12	3,0	3,0	-	1	VN-LHC 20	M 4	3
16	3,0	-	-	2	VN-LHC 20	M 4	3
20	3,0	-	-	2	VN-LHC 20	M 4	3
25	3,5	3,0	1,5	3	VN-LHC 40	M 5	3 / 3,5
30	3,5	3,0	2	4	VN-LHC 40	M 5	3 / 3,5
40	3,5	3,0	1,5	4	VN-LHC 40	M 5	3 / 3,5
50	4,5	5,0	2,5	4	VN-LHC 50	M 6	5 / 4,5
60	6,0	2,5	5	4	VN-LHC 80	M 8	6 [5]
80	8,0	2,5	5	4	VN-LHC 80	M 8	8 [5]

[1] All linear plain bearings of Design 2
[2] Recommendations for holes to take grease nipples: see page 26.
[3] Grub screws according to DIN 417 and ISO 7435 or DIN 915 and ISO 4028.
[4] Straight pins according to DIN 7, slotted pins - DIN 1481 or grooved pins - DIN 1470 and DIN 1471.
[5] Grub screw according to DIN 551 / ISO 4766 or DIN 913 / ISO 4026.
[6] Linear ball bearings are self-retaining when mounted in housings of at least bearing length.
Retaining rings are required with shorter housings.

Grease nipples
- for LBC and LPA linear bearings

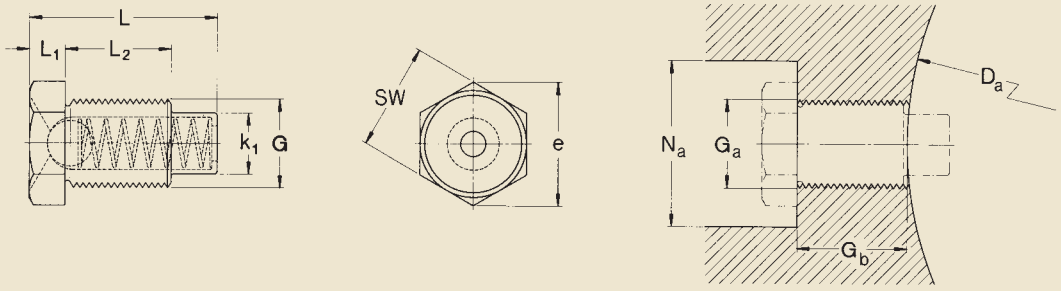

Dimensions								Designations	Attachment dimensions			
Bearing	Grease nipple							Grease nipple	Housing			
F_w	G	L	L_1	L_2	k_1	e	SW		D_a	G_a	G_b ±0,2	N_a
mm	—	mm						—	mm	—	mm	
12	M 4	7,7	1,5	3,5	3,0	5,5	5	**VN-LHC 20**	22	M 4	3,8	13
16	M 4	7,7	1,5	3,5	3,0	5,5	5	**VN-LHC 20**	26	M 4	3,8	13
20	M 4	7,7	1,5	3,5	3,0	5,5	5	**VN-LHC 20**	32	M 4	3,8	13
25	M 5	11,1	2,0	5,0	3,5	6,6	6	**VN-LHC 40**	40	M 5	5,2	15
30	M 5	11,1	2,0	5,0	3,5	6,6	6	**VN-LHC 40**	47	M 5	5,2	15
40	M 5	11,1	2,0	5,0	3,5	6,6	6	**VN-LHC 40**	62	M 5	5,2	15
50	M 6	14,8	2,5	7,0	4,5	7,8	7	**VN-LHC 50**	75	M 6	7,2	15
60	M 8	20,5	3,5	10,5	6	11,1	10	**VN-LHC 80**	90	M 8	11,2	18
80	M 8	20,5	3,5	10,5	6	11,1	10	**VN-LHC 80**	120	M 8	5,2	18

Axial and rotational fixation
- for LBHT linear ball bearings

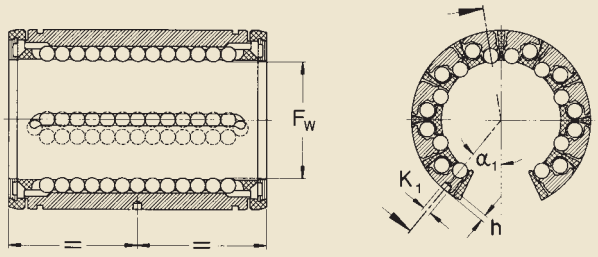

LBHT

Dimensions				Appropriate grub screws nach DIN 417 or DIN 915	Dimensions				Appropriate grub screws nach DIN 417 or DIN 915
F_w	K_1	h	α_1		F_w	K_1	h	α_1	
mm			degrees	—					
20	**2,6** ± 0,05	1,3 ± 0,2	47°	M 4	**50**	**4,1** ± 0,05	1,8 ± 0,3	39°	M 6
25	**2,6** ± 0,05	1,3 ± 0,2	55° 12'	M 4					
30	**3,6** ± 0,05	1,4 ± 0,2	39° 15'	M 5					
40	**3,6** ± 0,05	1,4 ± 0,2	38° 51'	M 5					

Linear plain bearings, ISO series 3

LPAR and LPAT linear plain bearings have the same external dimensions as LBC linear ball bearings. These bearings, which do not have seals or shields, are available in diameters ranging from 5 to 80 mm (LPAR) and from 12 to 80 mm (LPAT).

All variants, except for LPAR 5 and 8 can be relubricated. Bearings without a grease fitting should be held in place by a retaining ring (according to DIN 471) on either side of the bearing. Bearings with a grease fitting can be fixed via the grease fitting.



LPAT

LPAR

Linear plain bearings – LPAR/LPAT
- closed and open design

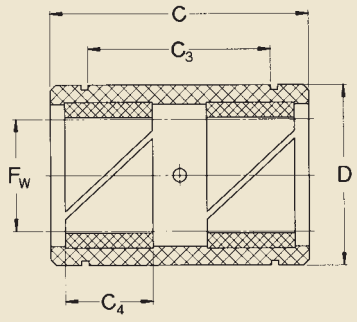

LPAR

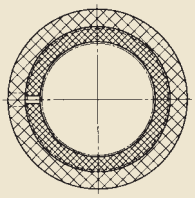

LPAR
closed

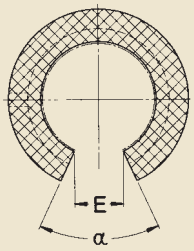

LPAT
open

Dimensions							Basic load ratings dyn. at 0,1 m/s	4 m/s	stat.	Mass Design closed	open	Designations Linear plain bearing closed	open
F_w	D $^{-0,05}$	C	C_3	C_4	$E^{1)}$	α	C	C	C_0				
mm						Deg.	N			kg		—	
5	12	22	12	7	-	-	280	7	980	0,003	-	LPAR 5	-
8	16	25	14	8	-	-	510	13	1 800	0,005	-	LPAR 8	-
12	22	32	20	10	7,6	78	965	24	3 350	0,012	0,008	LPAR 12	LPAT 12
16	26	36	22	12	10,4	78	1 530	38	5 400	0,016	0,012	LPAR 16	LPAT 16
20	32	45	28	15	10,8	60	2 400	60	8 300	0,03	0,023	LPAR 20	LPAT 20
25	40	58	40	20	13,2	60	4 000	100	14 000	0,06	0,045	LPAR 25	LPAT 25
30	47	68	48	23	14,2	50	5 500	137	19 300	0,09	0,07	LPAR 30	LPAT 30
40	62	80	56	25	18,7	50	8 000	200	28 000	0,20	0,15	LPAR 40	LPAT 40
50	75	100	72	30	23,6	50	12 000	300	41 500	0,34	0,26	LPAR 50	LPAT 50
60	90	125	95	35	29,6	54	16 600	415	60 000	0,63	0,46	LPAR 60	LPAT 60
80	120	165	125	45	38,4	54	29 000	720	100 000	1,50	1,10	LPAR 80	LPAT 80

[1)] Smallest sector width for diameter F_w.
For axial location and protection against relative motion see pages 25/26.

Linear bearing units, ISO series 3

A comprehensive range of linear ball bearing and plain bearing units are available. In addition to the basic design housing containing a single bearing, flanged units are also available as/or tandem and quadro units.

Linear bearing units consist of a light-weight, cast aluminium housing that has been optimized to provide high strength and stiffness. Due to their light weight, acceleration and inertia forces are kept to a minimum. LUC linear bearing units are available for shaft diameters ranging from 8 to 80 mm.

LUCD/LUCR linear bearing units offer a simple means of creating an economical linear guidance system. LUCD linear bearing units (for shaft diameters ranging from 12 to 80 mm) are normally supplied with a self-aligning LBCD shielded linear ball bearing. LUCR linear bearing units (for shaft diameters ranging from 8 to 80 mm) are supplied with a rigid LBCR shielded linear ball bearing. A grease fitting serves to retain the bearing axially and prevent it from turning. These units are also available fitted with LPAR linear plain bearings (designation LUCR ... PA) on request. Units fitted with an 8 mm diameter LPAR linear plain bearing cannot be relubricated. Therefore, these bearings should be axially located with retaining rings. The designation of these units is:

LUCR/LUCR ... PA.



LQCR



LTCF



LUND



LUCF



LUCE



LVCR

LUCE/LUCS linear bearing units are similar in design to the LUCD/LUCR units but instead of a closed housing, these units have a open housing with an adjustment screw. These units are typically used for arrangements requiring zero clearance or preload.

LUCE/LUCD linear ball bearing units are supplied with self-aligning LBCD linear ball bearings. LUCS/LUCR linear ball bearing units are supplied with rigid LBCR linear ball bearings. These units are not available with linear plain bearings.

LUCF/LUCT linear bearing units are designed for applications where, because of heavy loads and/or long guidance lengths, the shaft must be supported either partially or along its entire length. For this reason, the housings as well as the bearings have an open design. In all other respects these units are similar to the closed LUCD/LUCR units. Open linear bearing units are available as standard with an LBCF self-aligning linear ball bearing or a rigid LBCT linear ball bearing.

For the 12 to 80 mm sizes, the bearing is retained axially by means of a grease fitting. Where high load carrying capacity or longer service life is required, LUCT units can also be supplied fitted with LBHT linear ball bearings in sizes ranging from 20 to 50 mm. (Designation: LUCT ... BH). These units can also be relubricated. Bearing units may also be supplied fitted with linear plain bearings (Designation LUCT ... PA).

LUN linear bearing units are supplied as standard with shielded or sealed self-aligning linear ball bearings. Three versions are available: closed (LUND), adjustable (LUNE) and open, adjustable (LUNF). They are suitable for shaft diameters from 12 to 50 mm.

In contrast to the LUC linear bearing unit described above, the extruded aluminium housing envelops the linear ball bearing along its entire length. Two diagonally opposed attachment holes are provided on the underside of the housing to locate the bearing axially and to keep it from turning. These units can be relubricated.

LVCR flanged linear bearing units consist of a closed flanged cast iron housing fitted with a rigid LBCR linear ball bearing (12 to 80 mm). The bearing, sealed on both sides, is located axially by a dowel pin. The flange is machined on both faces to enable mounting on the front or rear in either direction. Flanged linear bearing units are not designed for relubrication.

LTC tandem linear bearing units consist of a solid extruded aluminium housing and two self-aligning linear ball bearings mounted one behind the other. A grease fitting is used to secure each bearing in position to prevent it from turning.

Tandem linear bearing units enable the construction of linear guidance systems such as tables of any required width. The housing can be attached to its supporting surface from below using socket head cap screws or from above via the two threaded holes in the housing. These tandem units are available in two versions: closed (LTCD) or open (LTCF). The linear ball bearings are supplied with one seal on the external end, as standard. Shaft diameters range from 12 to 50 mm.

LQC quadro linear bearing units consist of a one-piece aluminium housing with two bores arranged in parallel, each with two self-aligning linear ball bearings. The bearings are sealed on the external ends only. The bearings can be retained in position axially and also prevented from turning via the grease fitting. Except for size 8 units, relubrication is possible. SKF quadro units are available in two versions: closed (LQCD) and open (LQCF).

Quadro units used in combination with LEAS tandem shaft blocks (closed design) or LRCB shaft supports (open design) makes it possible to create simple linear slides and tables. Details of tables are provided on pages 49 to 51 of this catalogue.

The LQC design is available for shaft sizes from 8 to 50 mm. An exception is the size 8 unit that is fitted with an LBCR 8 A-LS non self-aligning linear ball bearing (full designation LQCR 8 A-2LS). LQCF units are suitable for shaft diameters from 12 to 50 mm.

All quadro units can be attached to their support surface either with socket head cap screws inserted from below or via the threaded holes in the housing.

Note
All linear ball bearing units (12 to 50 mm) can be fitted with non-self-aligning linear ball bearings on request.

Linear bearing units – LUCR/LUCD

closed housing, can be relubricated
- LUCR version using LBCR bearing
- LUCD version using LBCD bearing, self-aligning

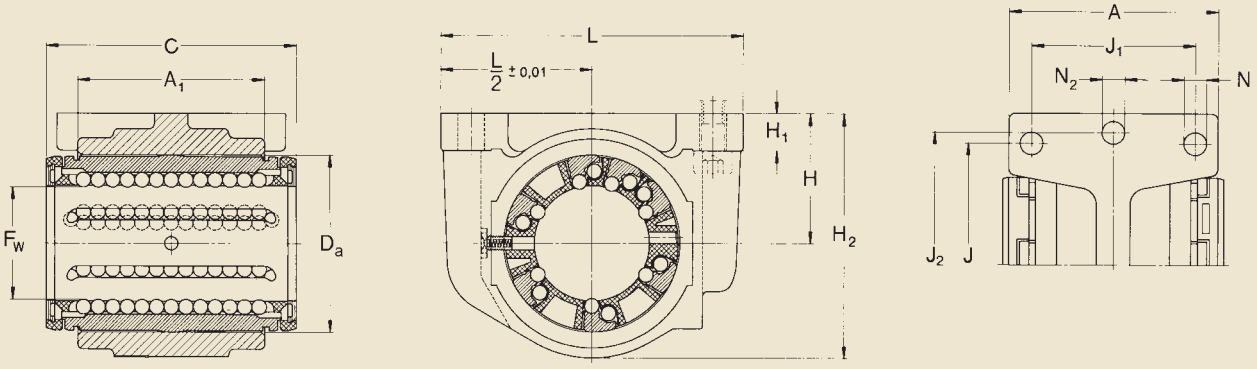

With shields

Dimensions														Basic load ratings		Mass	Designations	
														dyn.	stat.		Linear ball bearing unit with	
F_w	A	A_1	C	D_a	H ±0,01	H_1	H_2	J	J_1	J_2	L	$N^{2)}$	$N_2^{2)}$	C	C_0		2 shields	2 double lip seals
mm														N		kg		
8	27	14	25	16	15	5,5	28	25	20	35	45	3,2	5,3	490	355	0,028	LUCR 8[1)]	LUCR 8-2LS[1)]
12	31	20	32	22	18	6	34,5	32	23	42	52	4,3	5,3	1 080	815	0,053	LUCD 12	LUCD 12-2LS
16	34,5	22	36	26	22	7	40,5	40	26	46	56	4,3	5,3	1 320	865	0,069	LUCD 16	LUCD 16-2LS
20	41	28	45	32	25	8	48	45	32	58	70	4,3	6,4	2 000	1 370	0,144	LUCD 20	LUCD 20-2LS
25	52	40	58	40	30	10	58	60	40	68	80	5,3	6,4	2 900	2 040	0,285	LUCD 25	LUCD 25-2LS
30	59	48	68	47	35	10	67	68	45	76	88	6,4	6,4	4 650	3 250	0,4	LUCD 30	LUCD 30-2LS
40	74	56	80	62	45	12	85	86	58	94	108	8,4	8,4	7 800	5 200	0,72	LUCD 40	LUCD 40-2LS
50	66	72	100	75	50	14	99	108	50	116	135	8,4	10,5	11 200	6 950	1,19	LUCD 50	LUCD 50-2LS
60	84	95	125	90	60	18	118	132	65	138	160	10,5	13	20 400	18 000	2,17	LUCR 60	LUCR 60-2LS
80	113	125	165	120	80	22	158	170	90	180	205	13	13	37 500	32 000	5,15	LUCR 80	LUCR 80-2LS

LUCD/LUCR bearing units are available on request in stainless steel execution.
Designation: e.g. LUCD/LUCR 20-2LS/HV6

LUCD linear ball bearing units can also be fitted with rigid linear ball bearings of type LBCR. Designation: e.g. LUCR 12-2LS.

LUCR/LUCD linear bearing units F_w 8-80 are also available fitted with linear plain bearings. Designation: e.g. LUCR 20 PA.

For suitable shaft blocks LSCS/LSNS for these bearing units, see pages 44/45.

[1)] Linear ball bearings fitted to these units are secured with retaining rings according to DIN 471, cannot be relubricated, not self-aligning.
[2)] For screws with internal hexagon to DIN 912 / ISO 4762

Linear bearing units – LUCS/LUCE

slotted housing, can be relubricated, clearance adjustable
- LUCS version using LBCR bearing,
- LUCE version using LBCD bearing, self-aligning

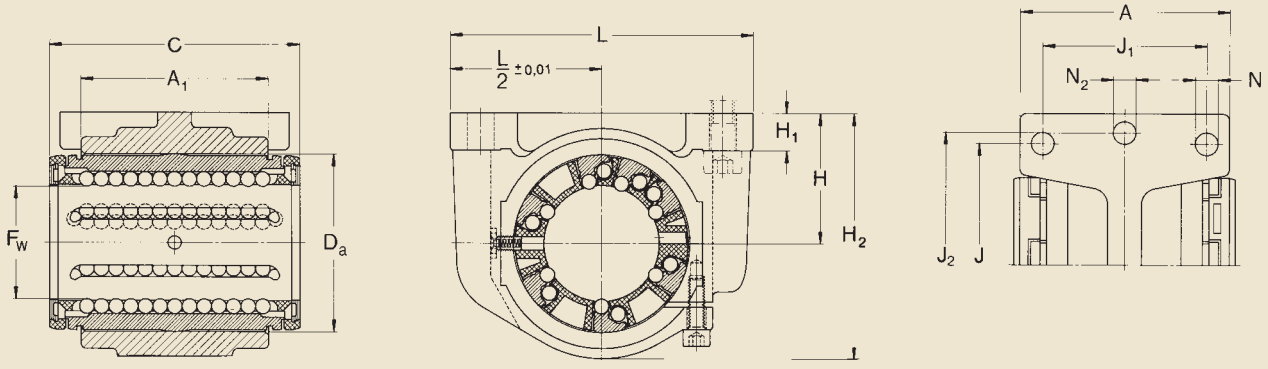

With shields

Dimensions														Basic load ratings		Mass	Designations	
														dyn.	stat.		Linear bearing unit with	
F_w	A	A_1	C	D_a	H ±0,01	H_1	H_2	J	J_1	J_2	L	$N^{2)}$	$N_2^{2)}$	C	C_0		2 shields	2 double lip seals
mm														N		kg		—
8	27	14	25	16	15	5,5	28	25	20	35	45	3,2	5,3	490	355	0,028	LUCS 8[1)]	LUCS 8-2LS[1)]
12	31	20	32	22	18	6	34,5	32	23	42	52	4,3	5,3	1 080	815	0,053	LUCE 12	LUCE 12-2LS
16	34,5	22	36	26	22	7	40,5	40	26	46	56	4,3	5,3	1 320	865	0,069	LUCE 16	LUCE 16-2LS
20	41	28	45	32	25	8	48	45	32	58	70	4,3	6,4	2 000	1 370	0,144	LUCE 20	LUCE 20-2LS
25	52	40	58	40	30	10	58	60	40	68	80	5,3	6,4	2 900	2 040	0,285	LUCE 25	LUCE 25-2LS
30	59	48	68	47	35	10	67	68	45	76	88	6,4	6,4	4 650	3 250	0,4	LUCE 30	LUCE 30-2LS
40	74	56	80	62	45	12	85	86	58	94	108	8,4	8,4	7 800	5 200	0,72	LUCE 40	LUCE 40-2LS
50	66	72	100	75	50	14	99	108	50	116	135	8,4	10,5	11 200	6 950	1,19	LUCE 50	LUCE 50-2LS
60	84	95	125	90	60	18	118	132	65	138	160	10,5	13	20 400	18 000	2,17	LUCS 60	LUCS 60-2LS
80	113	125	165	120	80	22	158	170	90	180	205	13	13	37 500	32 000	5,15	LUCS 80	LUCS 80-2LS

Upon request LUCE/LUCS bearing units are available in stainless steel execution.
Designation: e.g. LUCE/LUCS 20-2LS/HV6

LUCE linear bearing units can also be fitted with rigid linear ball bearings of type LBCR ... A. Designation: e.g. LUCS 20-2LS.

For suitable shaft blocks LSCS/LSNS for these bearing units, see pages 44/45.

[1)] Linear ball bearings fitted to these units are secured with retaining rings according to DIN 471, cannot be relubricated, not self-aligning.
[2)] For screws with internal hexagon to DIN 912 / ISO 4762.

Linear bearing units – LUCT/LUCF

open housing, can be relubricated, clearance adjustable
- LUCT version using LBCT bearing
- LUCF version using LBCF bearing, self-aligning

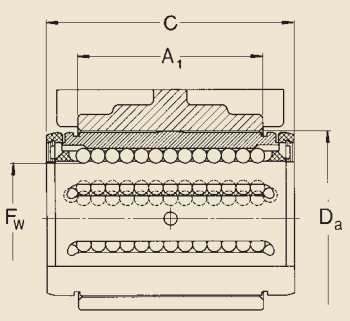

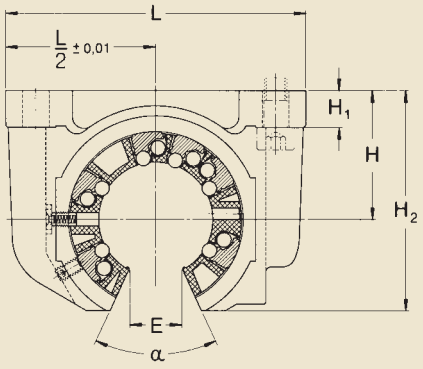

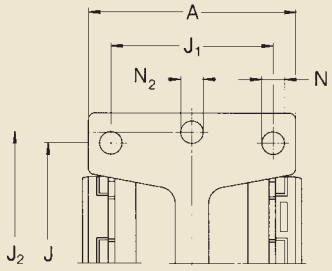

With shields

Dimensions																Basic load ratings		Mass	Designations	
																dyn.	stat.		Linear bearing unit with	
F_w	A	A_1	C	D_a	H ±0,01	H_1	H_2	J	J_1	J_2	L	$N^{2)}$	$N_2{}^{2)}$	$E^{1)}$	α	C	C_0		2 shields	2 double lip seals
mm															Deg.	N		kg	—	
12	31	20	32	22	18	6	28	32	23	42	52	4,3	5,3	7,6	78	1 080	815	0,046	LUCF 12	LUCF 12-2LS
16	34,5	22	36	26	22	7	35	40	26	46	56	4,3	5,3	10,4	78	1 320	865	0,061	LUCF 16	LUCF 16-2LS
20	41	28	45	32	25	8	42	45	32	58	70	4,3	6,4	10,8	60	2 000	1 370	0,124	LUCF 20	LUCF 20-2LS
25	52	40	58	40	30	10	51	60	40	68	80	5,3	6,4	13,2	60	2 900	2 040	0,251	LUCF 25	LUCF 25-2LS
30	59	48	68	47	35	10	60	68	45	76	88	6,4	6,4	14,2	50	4 650	3 250	0,374	LUCF 30	LUCF 30-2LS
40	74	56	80	62	45	12	77	86	58	94	108	8,4	8,4	18,7	50	7 800	5 200	0,63	LUCF 40	LUCF 40-2LS
50	66	72	100	75	50	14	88	108	50	116	135	8,4	10,5	23,6	50	11 200	6 950	1,04	LUCF 50	LUCF 50-2LS
60	84	95	125	90	60	18	105	132	65	138	160	10,5	13,0	29,6	54	20 400	18 000	2,0	LUCT 60	LUCT 60-2LS
80	113	125	165	120	80	22	140	170	90	180	205	13,0	13,0	38,4	54	37 500	32 000	5,0	LUCT 80	LUCT 80-2LS

Upon request LUCF/LUCT bearing units are available in stainless steel execution.
Designation: e.g. LUCF/LUCT 20-2LS/HV6

LUCF linear ball bearing units can also be fitted with rigid linear ball bearings of type LBCT ... A.
Designation: e.g. LUCT 20-2LS.

LUCF/LUCT linear bearing units F_w 12-80 are also available fitted with linear plain bearings.
Designation: e.g. LUCT 20 PA.

For suitable shaft supports for these bearing units, designation LRCB/LRCC, see page 47.

[1] Minimum sector width at diameter F_w.
[2] For cylindrical screws with internal hexagon to DIN 912 / ISO 4762.

Linear bearing units – LUCT ... BH

open housing, can be relubricated, clearance adjustable
- LUCT version using LBHT bearing

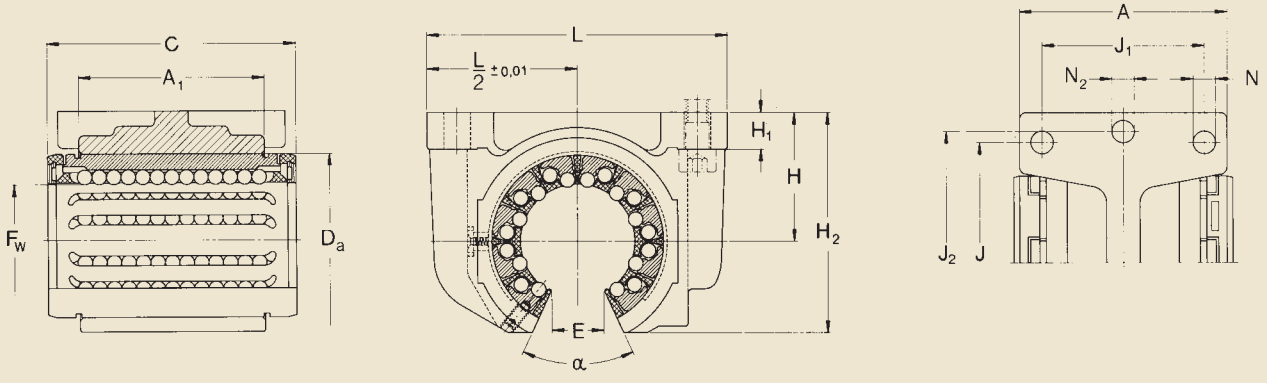

With shields

Dimensions																Basic load ratings		Mass	Designations	
																dyn.	stat.		Linear bearings unit with	
F_w	A	A_1	C	D_a	H ±0,01	H_1	H_2	J	J_1	J_2	L	$N^{2)}$	$N_2^{2)}$	$E^{1)}$	α	C	C_0		2 shields	2 double lip seals
mm															Deg.	N		kg	—	
20	41	28	45	32	25	8	42	45	32	58	70	4,3	6,4	10,8	60	2 650	2 650	0,14	LUCT 20 BH	LUCT 20 BH-2LS
25	52	40	58	40	30	10	51	60	40	68	80	5,3	6,4	13,2	60	4 900	5 100	0,275	LUCT 25 BH	LUCT 25 BH-2LS
30	59	48	68	47	35	10	60	68	45	76	88	6,4	6,4	14,2	50	7 200	8 000	0,48	LUCT 30 BH	LUCT 30 BH-2LS
40	74	56	80	62	45	12	77	86	58	94	108	8,4	8,4	18,7	50	11 600	11 400	0,86	LUCT 40 BH	LUCT 40 BH-2LS
50	66	72	100	75	50	14	88	108	50	116	135	8,4	10,5	23,6	50	17 300	17 000	1,44	LUCT 50 BH	LUCT 50 BH-2LS

Upon request LUCT bearing units are available in stainless steel execution.
Designation: e.g. LUCT 20 BH-2LS/HV6

Suitable shaft supports, designation LRCB/LRCC, are available for these units. See page 47 for details.

[1] Smallest sector width at diameter F_w.
[2] For screws with internal hexagon to DIN 912 / ISO 4762.

Linear bearing units – LUND

closed housing, can be relubricated

- LUND version using LBCD bearing, self-aligning

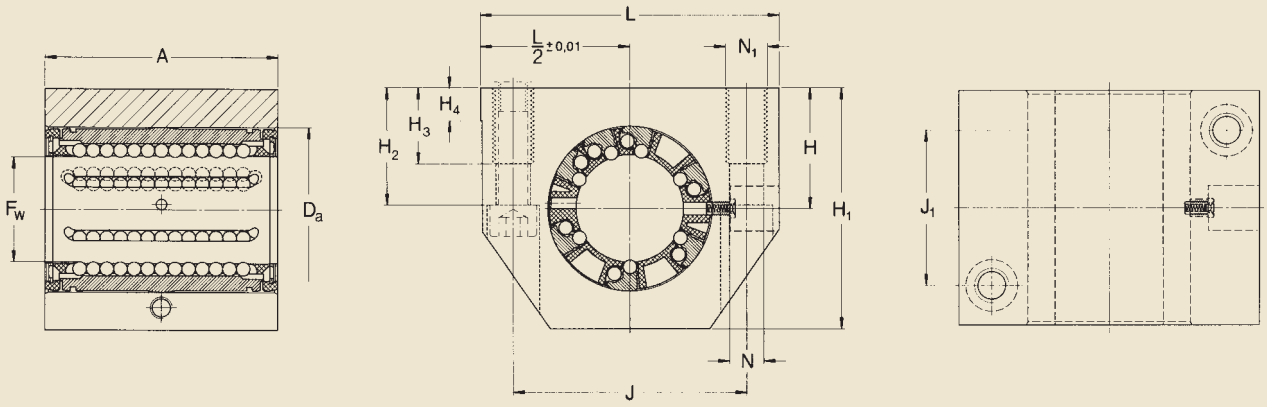

With shields

Dimensions													Basic load ratings		Mass	Designations	
													dyn.	stat.		Linear bearing unit with	
																2 shields	2 double lip seals
F_w	A	D_a	H ±0,01	H_1	H_2	H_3	H_4	J	J_1	L	$N^{1)}$	$N_1{}^{1)}$	C	C_0			
mm												—	N		kg	—	
12	32	22	18	35	16,5	11	6	32	23	43	4,3	M 5	1 080	815	0,093	**LUND 12**	**LUND 12-2LS**
16	37	26	22	42	21	13	7	40	26	53	5,3	M 6	1 320	865	0,161	**LUND 16**	**LUND 16-2LS**
20	45	32	25	50	24	18	7,5	45	32	60	6,6	M 8	2 000	1 370	0,255	**LUND 20**	**LUND 20-2LS**
25	58	40	30	61	29	22	8,5	60	40	78	8,4	M 10	2 900	2 040	0,533	**LUND 25**	**LUND 25-2LS**
30	68	47	35	70	34	22	9,5	68	45	87	8,4	M 10	4 650	3 250	0,79	**LUND 30**	**LUND 30-2LS**
40	80	62	45	90	44	26	11	86	58	108	10,5	M 12	7 800	5 200	1,44	**LUND 40**	**LUND 40-2LS**
50	100	75	50	105	49	35	11	108	50	132	13,5	M 16	11 200	6 950	2,47	**LUND 50**	**LUND 50-2LS**

Upon request LUND bearing units are available in stainless steel execution.
Designation: e.g. LUND 20-2LS/HV6

For suitable shaft blocks LSCS/LSNS for these bearing units, see pages 44/45.

[1] For screws with internal hexagon to DIN 912 / ISO 4762.

Linear bearing units – LUNE

slotted housing, can be relubricated, clearance adjustable
- LUNE version using LBCD bearing, self-aligning

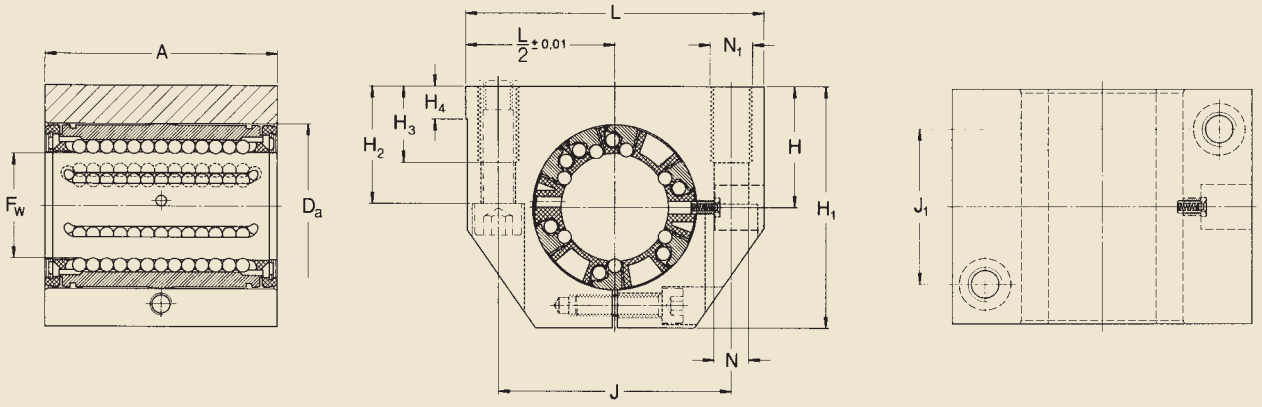

With shields

Dimensions													Basic load ratings		Mass	Designations	
													dyn.	stat.		Linear bearing unit with	
																2 shields	2 double lip seals
F_w	A	D_a	H $_{\pm 0,01}$	H_1	H_2	H_3	H_4	J	J_1	L	$N^{1)}$	$N_1{}^{1)}$	C	C_0			
mm												—	N		kg	—	
12	32	22	18	35	16,5	11	6	32	23	43	4,3	M 5	1 080	815	0,093	**LUNE 12**	**LUNE 12-2LS**
16	37	26	22	42	21	13	7	40	26	53	5,3	M 6	1 320	865	0,161	**LUNE 16**	**LUNE 16-2LS**
20	45	32	25	50	24	18	7,5	45	32	60	6,6	M 8	2 000	1 370	0,255	**LUNE 20**	**LUNE 20-2LS**
25	58	40	30	61	29	22	8,5	60	40	78	8,4	M 10	2 900	2 040	0,533	**LUNE 25**	**LUNE 25-2LS**
30	68	47	35	70	34	22	9,5	68	45	87	8,4	M 10	4 650	3 250	0,79	**LUNE 30**	**LUNE 30-2LS**
40	80	62	45	90	44	26	11	86	58	108	10,5	M 12	7 800	5 200	1,44	**LUNE 40**	**LUNE 40-2LS**
50	100	75	50	105	49	35	11	108	50	132	13,5	M 16	11 200	6 950	2,47	**LUNE 50**	**LUNE 50-2LS**

Upon request LUNE bearing units are available in stainless steel execution.
Designation: e.g. LUNE 20-2LS/HV6

For suitable shaft blocks LSCS/LSNS for these bearing units, see pages 44/45.

[1)] For screws with internal hexagon to DIN 912 / ISO 4762.

Linear bearing units – LUNF

open housing, can be relubricated, clearance adjustable
- LUNF version using LBCF bearing, self-aligning

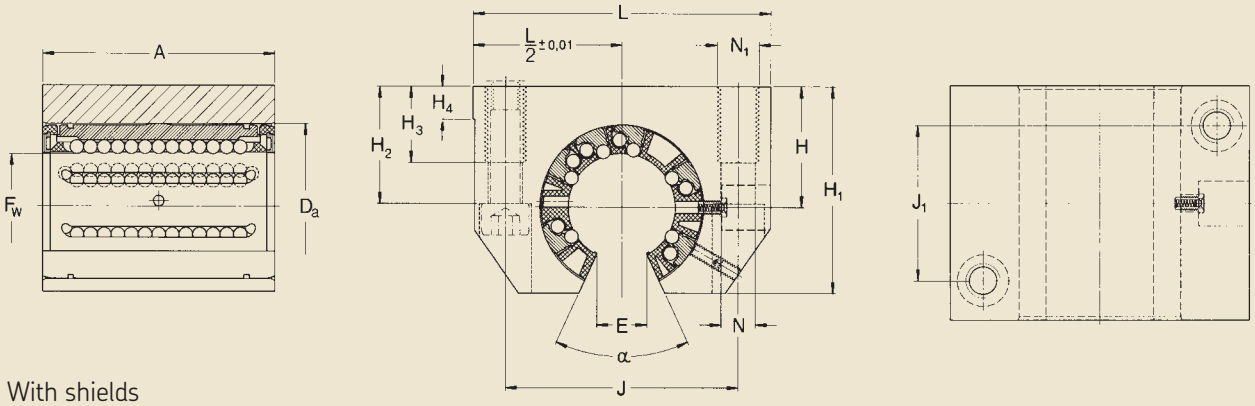

With shields

Dimensions															Basic load ratings		Mass	Designations	
															dyn.	stat.		Linear bearing unit with	
F_w	A	D_a	H ±0,01	H_1	H_2	H_3	H_4	J	J_1	L	$N^{2)}$	$N_1^{2)}$	$E^{1)}$	α	C	C_0		2 shields	2 double lip seals
mm												—	mm	Deg.	N		kg	—	
12	32	22	18	28	16,5	11	6	32	23	43	4,3	M 5	7,6	78	1 080	815	0,074	**LUNF 12**	**LUNF 12-2LS**
16	37	26	22	35	21	13	7	40	26	53	5,3	M 6	10,4	78	1 320	865	0,132	**LUNF 16**	**LUNF 16-2LS**
20	45	32	25	42	24	18	7,5	45	32	60	6,6	M 8	10,8	60	2 000	1 370	0,215	**LUNF 20**	**LUNF 20-2LS**
25	58	40	30	51	29	22	8,5	60	40	78	8,4	M 10	13,2	60	2 900	2 040	0,443	**LUNF 25**	**LUNF 25-2LS**
30	68	47	35	60	34	22	9,5	68	45	87	8,4	M 10	14,2	50	4 650	3 250	0,67	**LUNF 30**	**LUNF 30-2LS**
40	80	62	45	77	44	26	11	86	58	108	10,5	M 12	18,7	50	7 800	5 200	1,21	**LUNF 40**	**LUNF 40-2LS**
50	100	75	50	88	49	35	11	108	50	132	13,5	M 16	23,6	50	11 200	6 950	2,02	**LUNF 50**	**LUNF 50-2LS**

Upon request LUNF bearing units are available in stainless steel execution.
Designation: e.g. LUNF 20-2LS/HV6

Suitable shaft supports, designation LRCB/LRCC are available for these units. See page 47 for details.

[1] Smallest sector width at diameter F_w.
[2] For screws with internal hexagon to DIN 912 / ISO 4762.

Flanged linear bearing units – LVCR

closed housing

- LVCR using LBCR bearing

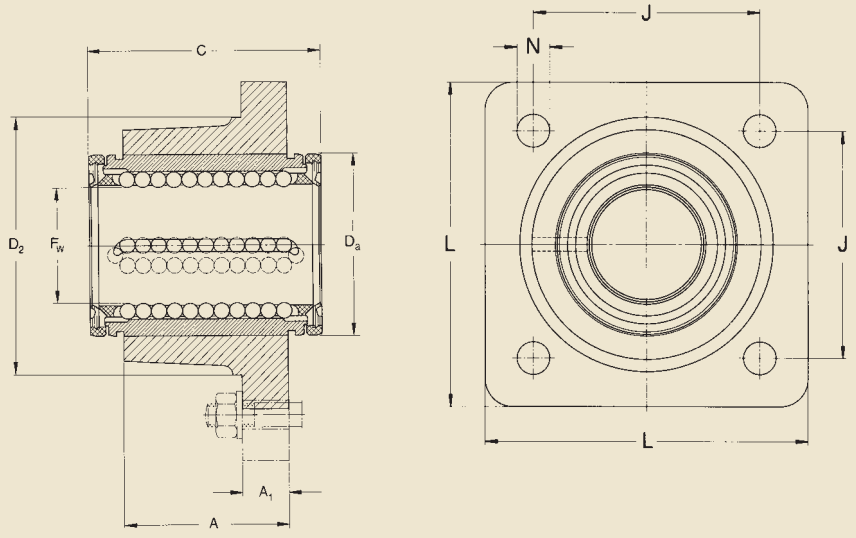

With double lip seals

Dimensions									Basic load ratings		Mass	Designations
									dyn.	stat.		Linear bearing unit [2] with 2 double lip seals
F_w	A	A_1	C	D_a	D_2	J	L	N[1]	C	C_0		
mm									N		kg	—
12	20	8	32	22	32	30	42	5,5	1 080	815	0,113	**LVCR 12-2LS**
16	22	8	36	26	38	35	50	5,5	1 320	865	0,161	**LVCR 16-2LS**
20	28	10	45	32	46	42	60	6,6	2 000	1 370	0,314	**LVCR 20-2LS**
25	40	12	58	40	58	54	74	6,6	2 900	2 040	0,655	**LVCR 25-2LS**
30	48	14	68	47	66	60	84	9	4 650	3 250	0,98	**LVCR 30-2LS**
40	56	16	80	62	90	78	108	11	7 800	5 200	1,91	**LVCR 40-2LS**
50	72	18	100	75	110	98	130	11	11 200	6 950	3,27	**LVCR 50-2LS**
60	95	22	125	90	135	120	160	13,5	20 400	18 000	5,92	**LVCR 60-2LS**
80	125	25	165	120	180	155	200	13,5	37 500	32 000	13,3	**LVCR 80-2LS**

Upon request LVCR bearing units are available in stainless steel execution.
Designation: e.g. LVCR 20-2LS/HV6

LVCR linear ball bearing units of sizes F_w 12-50 can also be fitted with linear bearings which are self-aligning
Designation: e.g. LVCD 12-2LS.

[1] For screws with internal hexagon to DIN 912 / ISO 4762.
[2] Linear ball bearings fitted to these units are secured using pins according to DIN 1470. They are not designed for relubrication.

Tandem linear bearing units – LTCD

closed housing, can be relubricated

- LTCD version using LBCD bearing, self-aligning

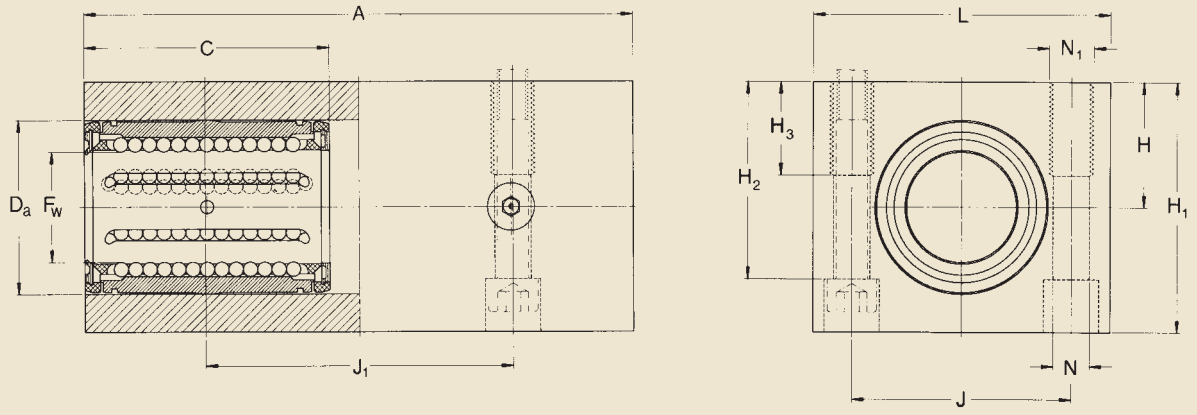

With double lip seals on the outside

Dimensions													Basic load ratings		Mass	Designations
													dyn.	stat.		Linear bearing unit with double lip seals
F_w	A	C	D_a	H ±0,01	H_1	H_2	H_3	J	J_1	L	$N^{1)}$	$N_1{}^{1)}$	C	C_0		
mm												—	N		kg	—
12	76	32	22	18	35	27	13	30	40	42	5,3	M 6	1 760	1 630	0,236	**LTCD 12-2LS**
16	84	36	26	22	41,5	33	13	36	45	50	5,3	M 6	2 160	1 730	0,372	**LTCD 16-2LS**
20	104	45	32	25	49,5	39,5	18	45	55	60	6,4	M 8	3 200	2 750	0,67	**LTCD 20-2LS**
25	130	58	40	30	59,5	47	22	54	70	74	8,4	M 10	4 750	4 150	1,236	**LTCD 25-2LS**
30	152	68	47	35	69,5	55	26	62	85	84	10,5	M 12	7 500	6 550	1,87	**LTCD 30-2LS**
40	176	80	62	45	89,5	71	34	80	100	108	13	M 16	12 700	10 400	3,55	**LTCD 40-2LS**
50	224	100	75	50	99,5	81	34	100	125	130	13	M 16	18 300	14 000	5,92	**LTCD 50-2LS**

Upon request LTCD bearing units are available in stainless steel execution.
Designation: e.g. LTCD 20-2LS/HV6

For suitable shaft blocks LSCS/LSNS for these bearing units, see pages 44/45.

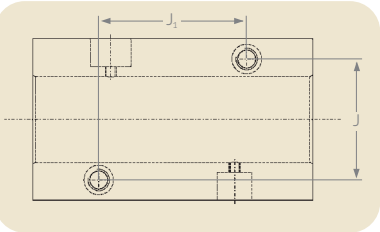

[1)] For 2 screws with internal hexagon to DIN 912 / ISO 4762.

Tandem linear bearing units – LTCF

open housing, can be relubricated.
- LTCF version using LBCF bearing, self-aligning

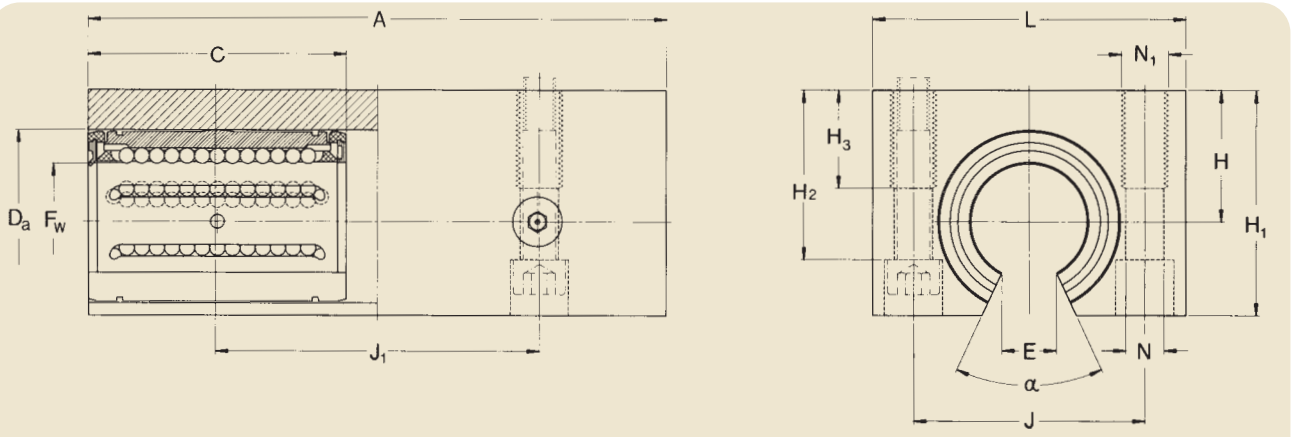

With double lip seals on the outside

Dimensions															Basic load ratings		Mass	Designations
															dyn.	stat.		Linear bearing unit with double lip seals
F_w	A	C	D_a	H ±0,01	H_1	H_2	H_3	J	J_1	L	$N^{2)}$	$N_1{}^{2)}$	$E^{1)}$	α	C	C_0		
mm												—	mm	Deg.	N		kg	—
12	76	32	22	18	29	23,5	13	30	40	42	5,3	M 6	7,6	78	1 760	1 630	0,178	**LTCF 12-2LS**
16	84	36	26	22	35	28	13	36	45	50	5,3	M 6	10,4	78	2 160	1 730	0,284	**LTCF 16-2LS**
20	104	45	32	25	42	33,5	18	45	55	60	6,4	M 8	10,8	60	3 200	2 750	0,62	**LTCF 20-2LS**
25	130	58	40	30	51	40	22	54	70	74	8,4	M 10	13,2	60	4 750	4 150	0,966	**LTCF 25-2LS**
30	152	68	47	35	60	46,5	26	62	85	84	10,5	M 12	14,2	50	7 500	6 550	1,49	**LTCF 30-2LS**
40	176	80	62	45	77	61	34	80	100	108	13	M 16	18,7	50	12 700	10 400	2,81	**LTCF 40-2LS**
50	224	100	75	50	88	72	34	100	125	130	13	M 16	23,6	50	18 300	14 000	4,83	**LTCF 50-2LS**

Upon request LTCF bearing units are available in stainless steel execution.
Designation: e.g. LTCF 20-2LS/HV6

For suitable shaft supports for these bearing units, designation LRCB/LRCC, see page 47.

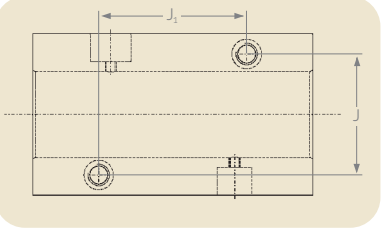

[1] Smallest sector width at diameter F_w.
[2] For 2 screws with internal hexagon to DIN 912 / ISO 4762.

Quadro linear bearing units – LQCR/LQCD

open housing, can be relubricated.
- LQCR version using LBCR bearing
- LQCD version using LBCD bearing, self-aligning

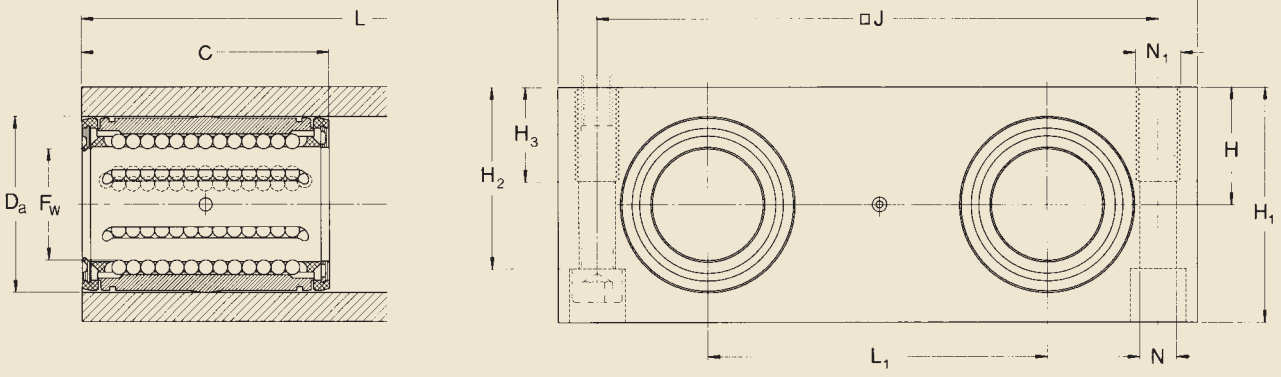

With double lip seals on the outside

Dimensions												Basic load ratings		Mass	Designations
												dyn.	stat.		Linear bearing unit with double lip seals
F_w	C	D_a	H ±0,01	H_1	H_2	H_3	J	L	L_1	$N^{2)}$	$N_1^{2)}$	C	C_0		
mm											—	N		kg	—
8	25	16	11,5	23	17,5	11	55	65	32	4,3	M 5	1 290	1 420	0,226	**LQCR 8-2LS**[1)]
12	32	22	16	32	25	13	73	85	42	5,3	M 6	2 850	3 250	0,492	**LQCD 12-2LS**
16	36	26	18	36	29	13	88	100	54	5,3	M 6	3 450	3 450	0,744	**LQCD 16-2LS**
20	45	32	23	46	37,5	18	115	130	72	6,6	M 8	5 200	5 500	1,68	**LQCD 20-2LS**
25	58	40	28	56	45	22	140	160	88	8,4	M 10	7 650	8 150	3,022	**LQCD 25-2LS**
30	68	47	32	64	50,5	26	158	180	96	10,5	M 12	12 200	12 900	4,27	**LQCD 30-2LS**
40	80	62	40	80	64	34	202	230	122	13,5	M 16	20 800	20 800	8,38	**LQCD 40-2LS**
50	100	75	48	96	80	34	250	280	152	13,5	M 16	30 000	28 000	14,99	**LQCD 50-2LS**

Upon request LQCR/LQCD bearing units are available in stainless steel execution.
Designation: e.g. LQCR/LQCD 20-2LS/HV6

For suitable shaft blocks for these bearing units, designation LEAS ... A and LEAS ... B, see page 46.

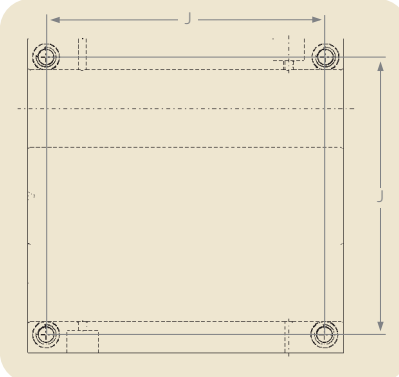

[1)] Unit with linear ball bearing not designed for re-greasing, non self-aligning.
[2)] For 4 cylindrical screws with internal hexagon to DIN 912 / ISO 4762.

Quadro linear bearing units – LQCF

open housing, can be relubricated.
- LQCF version with LBCF bearing, self-aligning

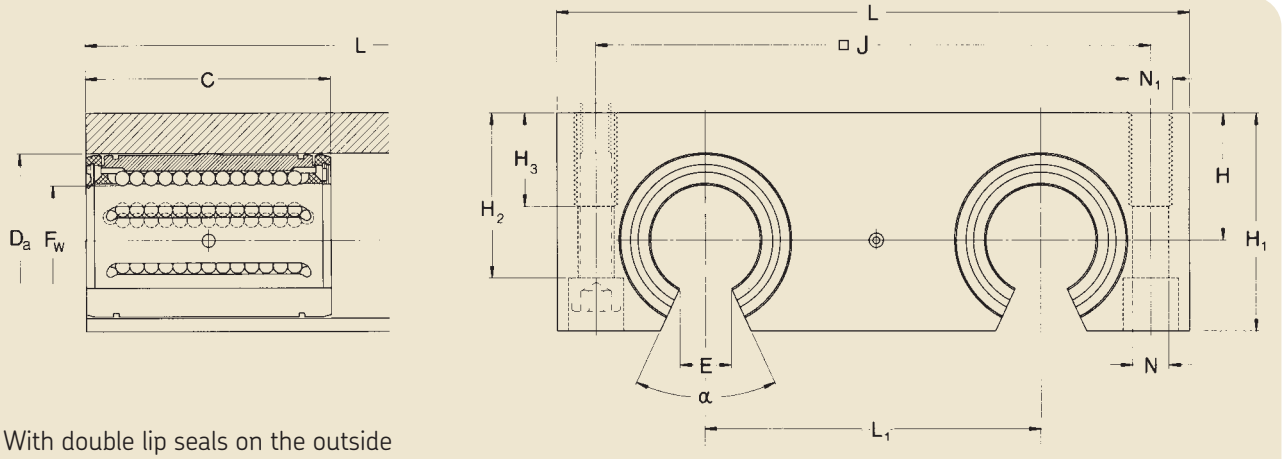

With double lip seals on the outside

Dimensions														Basic load ratings		Mass	Designations
F_w	C	D_a	H ±0,01	H_1	H_2	H_3	J	L	L_1	$N^{2)}$	$N_1{}^{2)}$	$E^{1)}$	α	dyn. C	stat. C_0		Linear bearing unit with double lip seals
mm											—	mm	Deg.	N		kg	—
12	32	22	18	30	23,4	13	73	85	42	5,3	M 6	7,6	78	2 850	3 250	0,426	**LQCF 12-2LS**
16	36	26	22	35	28,4	13	88	100	54	5,3	M 6	10,4	78	3 450	3 450	0,698	**LQCF 16-2LS**
20	45	32	25	42	33,5	18	115	130	72	6,6	M 8	10,8	60	5 200	5 500	1,42	**LQCF 20-2LS**
25	58	40	30	51	40	22	140	160	88	8,4	M 10	13,2	60	7 650	8 150	2,572	**LQCF 25-2LS**
30	68	47	35	60	46,5	26	158	180	96	10,5	M 12	14,2	50	12 200	12 900	3,79	**LQCF 30-2LS**
40	80	62	45	77	61	34	202	230	122	13,5	M 16	18,7	50	20 800	20 800	7,8	**LQCF 40-2LS**
50	100	75	55	93	77	34	250	280	152	13,5	M 16	23,6	50	30 000	28 000	13,96	**LQCF 50-2LS**

Upon request LQCF bearing units are available in stainless steel execution.
Designation: e.g. LQCF 20-2LS/HV6

For suitable shaft supports for these bearing units, designation LRCB/LRCC, see page 47.

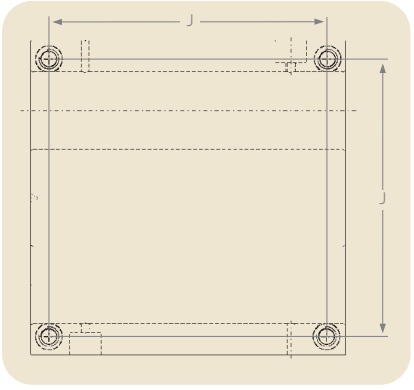

[1] Smallest sector width at diameter F_w.
[2] For 4 cylindrical screws with internal hexagon to DIN 912 / ISO 4762.

Shaft carriers / shaft blocks

Among shaft carriers, a distinction is made between shaft blocks and shaft supports. Shaft blocks support the shaft only at its ends; shaft supports typically run the entire length of the shaft and therefore require the use of open linear bearing units.

LSCS shaft blocks are made of cast aluminium and designed to grip the end of the shaft. These blocks are supplied as standard with two holes drilled in the base for attachment. LSCS shaft blocks are suitable for shaft diameters ranging from 8 to 80 mm.

LSNS and LSHS shaft blocks are made of extruded aluminium. They can be attached by through bolts or they can be bolted, via threaded holes, directly to the support surface. LSNS and LSHS shaft blocks are available for shaft diameters ranging from 12 to 50 mm.

LEBS/LEAS tandem shaft blocks
To match the duo and quadro linear bearing units with ISO series 1 linear ball bearings (LBBR), LEBS tandem shaft blocks are available in the "A" design, where the shaft block is fixed and the linear bearing moves axially. LEBS shaft blocks are available for shaft diameters ranging from 12 to 50 mm. For units with ISO series 3 linear ball bearings (LBC/LBHT) LEAS tandem shaft blocks are available in both the "A" and "B" design. The "B" design enables axial movement of the shafts through a fixed linear bearing unit. LEAS shaft blocks are available for shaft diameters ranging from 8 to 50 mm.

LRCB/LRCC shaft supports
For heavily loaded linear bearing units and/or long track lengths, SKF recommends the use of shaft supports to eliminate shaft bending. For these applications, continuous or at least partial support of the shaft is necessary. SKF offers shaft supports for shaft diameters ranging from 12 to 80 mm. There are two types of shaft support: the LRCB with predrilled holes and the LRCC without holes.

Note: Shaft supports require the use of open design linear bearing units.



Shaft blocks – LSCS

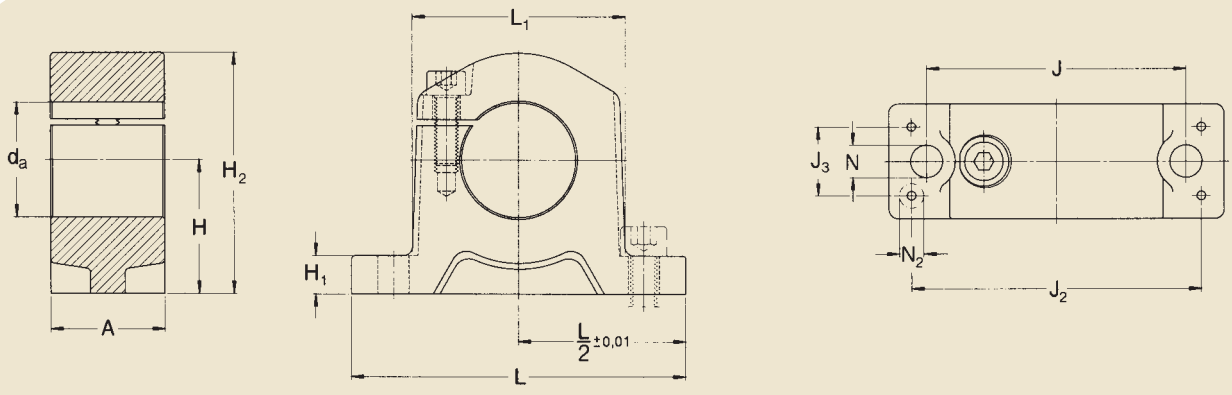

Dimensions												Mass	Designations
													Shaft block
d_a	A	H ±0,01	H_1	H_2	J	J_2	J_3	L	L_1	N[1]	N_2		
mm												kg	—
8	10	15	5,5	25	25	35	5	45	19	4,3	2,7	0,012	**LSCS 8**
12	12	20	6	32,5	32	42	6	52	25	5,3	3,2	0,023	**LSCS 12**
16	15	20	7	35,5	40	46	7,5	56	31,8	5,3	4,3	0,034	**LSCS 16**
20	20	25	8	43,5	45	58	10	70	37	5,3	5,3	0,065	**LSCS 20**
25	28	30	10	53	60	68	16	80	48	6,4	6,4	0,14	**LSCS 25**
30	30	35	10	63	68	76	18	88	56	8,4	6,4	0,20	**LSCS 30**
40	36	45	12	81	86	94	22	108	71	10,5	8,4	0,47	**LSCS 40**
50	49	50	14	92,5	108	116	30	135	86	10,5	10,5	0,68	**LSCS 50**
60	62	60	18	112	132	138	40	160	105	13	13	1,29	**LSCS 60**
80	85	80	22	147,5	170	180	60	205	136	17	15	3,01	**LSCS 80**

[1] For screws with internal hexagon to DIN 912 / ISO 4762.

Shaft blocks – LSNS/LSHS

in combination with linear ball bearings acc. to ISO series 1 and ISO series 3

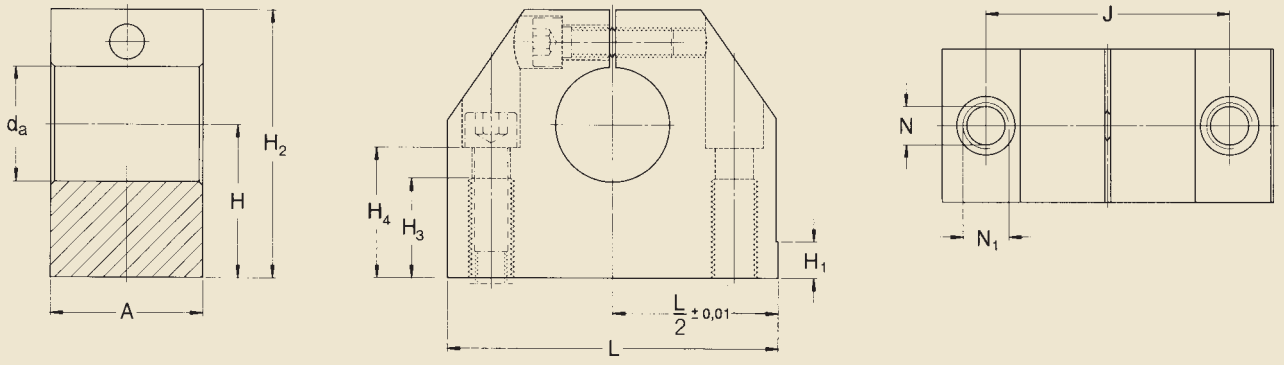

Design versions
LSHS = Shaft blocks with ISO series 1 LBBR bearings
LSNS = Shaft blocks with ISO series 3 LBC/LBH bearings

Dimensions											Mass	Designations
												Shaft block
d_a	A	H ±0,01	H_1	H_2	H_3	H_4	J	L[2]	N[1]	N_1[1]		
mm											kg	—
12	20	20	6	35	13	16,5	30	43	5,3	M 6	0,06	**LSNS 12**
16	24	25	7	42	18	21	38	53	6,6	M 8	0,11	**LSNS 16**
20	30	30	7,5	50	22	25	42	60	8,4	M 10	0,17	**LSNS 20**
25	38	35	8,5	61	26	30	56	78	10,5	M 12	0,34	**LSNS 25**
30	40	40	9,5	70	26	34	64	87	10,5	M 12	0,46	**LSNS 30**
40	48	50	11	90	34	44	82	108	13,5	M 16	0,90	**LSNS 40**
50	58	60	11	105	43	49	100	132	17,5	M 20	1,45	**LSNS 50**
12	18	19	—	33	13	16,5	27	40	5,3	M 6	0,05	**LSHS 12**
16	20	22	—	38	13	18	32	45	5,3	M 6	0,07	**LSHS 16**
20	24	25	—	45	18	21	39	53	6,6	M 8	0,11	**LSHS 20**
25	28	31	—	54	22	25	44	62	8,4	M 10	0,17	**LSHS 25**
30	30	34	—	60	22	29	49	67	8,4	M 10	0,22	**LSHS 30**
40	40	42	—	76	26	37	66	87	10,5	M 12	0,47	**LSHS 40**
50	50	50	—	92	34	44	80	103	13,5	M 16	0,82	**LSHS 50**

[1] For screws with internal hexagon to DIN 912 / ISO 4762.
[2] Tolerance L/2 ± 0,01 only by execution LSNS.

Tandem shaft blocks – LEAS/LEBS

in combination with linear ball bearings and shafts acc. to ISO series 1 and ISO series 3

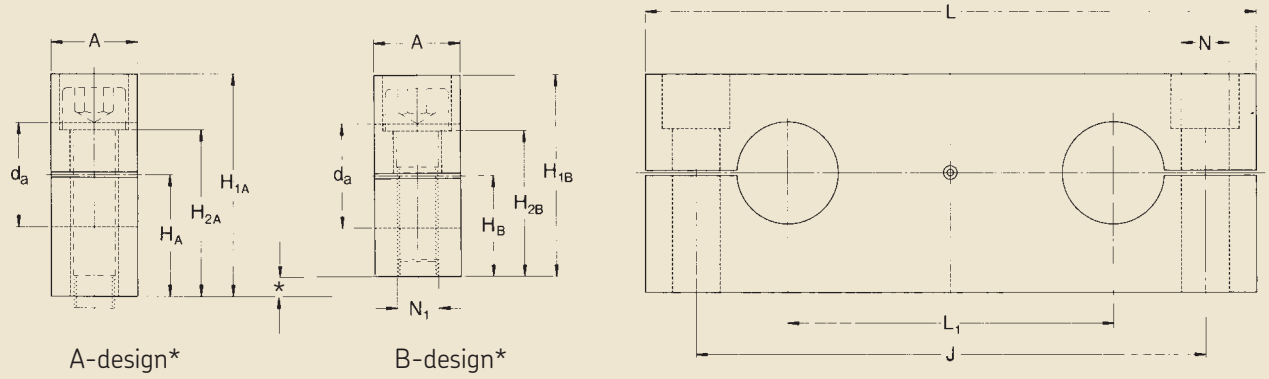

*Design versions
LEBS ... A = Shaft blocks with ISO series 1 LBBR bearings, to be used as shaft block
LEAS ... A = Shaft blocks with ISO series 3 LBC bearings, to be used as shaft block
LEAS ... B = Shaft blocks with ISO series 3 LBC bearings, to clamp on the shafts

Dimensions													Mass		Designations Tandem shaft block		ISO
													Design		Design		
d_a	A	H_A ±0,015	H_{1A}	H_{2A}	H_B ±0,015	H_{1B}	H_{2B}	J	L	L_1	$N^{1)}$	$N_1{}^{1)}$	A	B	A	B	
mm												—	kg		—		
12	15	17	30	21,5	—	—	—	64	80	40	6,6	—	0,08	—	**LEBS 12 A**	—	**1**
16	15	19,5	35	26,5	—	—	—	80	96	52	6,6	—	0,11	—	**LEBS 16 A**	—	**1**
20	18	22	40	29	—	—	—	97	115	63	9	—	0,17	—	**LEBS 20 A**	—	**1**
25	20	27	50	36,5	—	—	—	115	136	75	11	—	0,28	—	**LEBS 25 A**	—	**1**
30	20	31	56	42,5	—	—	—	125	146	80	11	—	0,32	—	**LEBS 30 A**	—	**1**
40	25	38	70	54	—	—	—	160	184	97	13,5	—	0,63	—	**LEBS 40 A**	—	**1**
50	30	43	80	59	—	—	—	180	210	107	17,5	—	0,90	—	**LEBS 50 A**	—	**1**
8	12	12,5	23	16	11	22	15	52	65	32	5,5	M 5	0,04	0,04	**LEAS 8 A**	**LEAS 8 B**	**3**
12	14	18	32	23,5	14	28	19,5	70	85	42	6,6	M 6	0,09	0,07	**LEAS 12 A**	**LEAS 12 B**	**3**
16	18	20	36	26,5	17	34	23,5	82	100	54	9	M 8	0,14	0,13	**LEAS 16 A**	**LEAS 16 B**	**3**
20	20	25	46	32,5	21	42	28,5	108	130	72	11	M 10	0,25	0,22	**LEAS 20 A**	**LEAS 20 B**	**3**
25	25	30	56	40	26	52	36	132	160	88	13,5	M 12	0,47	0,44	**LEAS 25 A**	**LEAS 25 B**	**3**
30	25	35	64	48	29	58	42	150	180	96	13,5	M 12	0,62	0,56	**LEAS 30 A**	**LEAS 30 B**	**3**
40	30	44	80	59	36	72	51	190	230	122	17,5	M 16	1,15	1,00	**LEAS 40 A**	**LEAS 40 B**	**3**
50	30	52	96	75	44	88	67	240	280	152	17,5	M 16	1,70	1,52	**LEAS 50 A**	**LEAS 50 B**	**3**

[1)] For screws with internal hexagon to DIN 912 / ISO 4762.

Shaft supports – LRCB/LRCC

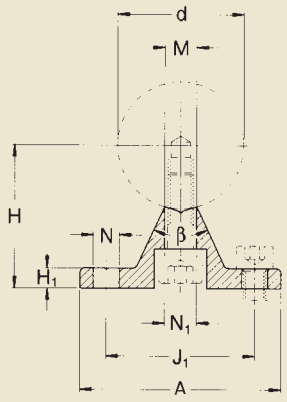

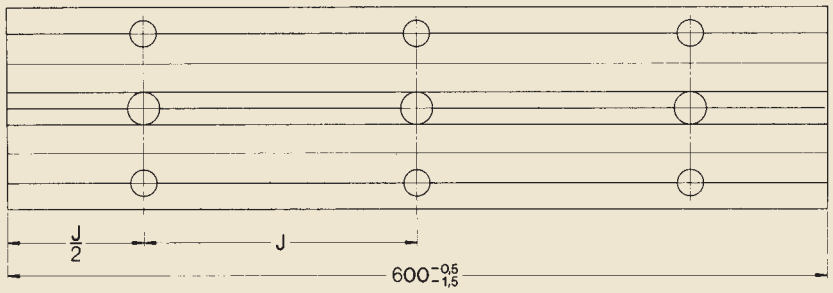

Design versions
LRCB = Shaft support with mounting holes
LRCC = Shaft support without mounting holes

Dimensions										Mass	Designations		
										LRCB design	Shaft support with bore holes	without bore holes	Shaft attachment[1]
d	A	H ±0,02	H_1	J	J_1	M	N[1]	N_1[1]	β				Screw
mm	mm								Deg.	kg	—		—
12	40	22	5	75	29	5,8	4,5	4,5	50	0,53	**LRCB 12**	**LRCC 12**	M 4x16
16	45	26	5	100	33	7	5,5	5,5	50	0,64	**LRCB 16**	**LRCC 16**	M 5x20
20	52	32	6	100	37	8,3	6,6	6,6	50	0,92	**LRCB 20**	**LRCC 20**	M 6x25
25	57	36	6	120	42	10,8	6,6	9	50	1,08	**LRCB 25**	**LRCC 25**	M 8x25
30	69	42	7	150	51	11	9	11	50	1,41	**LRCB 30**	**LRCC 30**	M 10x30
40	73	50	8	200	55	15	9	11	50	1,85	**LRCB 40**	**LRCC 40**	M 10x35
50	84	60	9	200	63	19	11	13,5	46	2,45	**LRCB 50**	**LRCC 50**	M 12x40
60	94	68	10	300	72	25	11	15,5	46	3,25	**LRCB 60**	**LRCC 60**	M 14x45
80	116	86	12	300	92	34	13,5	17,5	46	4,40	**LRCB 80**	**LRCC 80**	M 16x55

[1] For screws with internal hexagon to DIN 912 / ISO 4762 without spring washers.

Quadro linear tables, non-driven

The closed LZBU quadro linear table consists of a closed quadro linear bearing unit, two tandem shaft blocks and two shafts of the required length. The bearing unit is fitted with four LBCD-LS self-aligning linear ball bearings, each sealed at one end. The LZBU-"A" design enables axial movement of the linear bearing unit, i.e. the shafts are fixed to the machine bed via LEAS-"A" shaft blocks. The LZBU-"B" design is provided with LEAS-"B" shaft blocks. This combination enables the shafts to travel with the shaft blocks in applications where the linear bearing unit is fixed.

LZBU quadro linear tables can be supplied in sizes ranging from 8 to 50 mm. Size 8 tables are not self-aligning and are not designed for relubrication. The description of the closed quadro-linear table also applies to the combination of series 1 LQBR ... 2LS quadro linear bearing units with twin LEBS tandem shaft blocks and shafts (on special request only). Shaft diameters range from 12 to 50 mm.

The open LZAU quadro linear table comprises the open quadro-linear unit and two high precision shafts with shaft supports. The bearing unit is fitted with four LBCF-"A-LS" self-aligning linear ball bearings, each sealed on one end. The length of these tables is dictated by the distance between centres of the attachment holes in the LRCB shaft supports. The total length should always be a multiple of this distance. LZAU are available in sizes ranging from 12 to 50 mm.

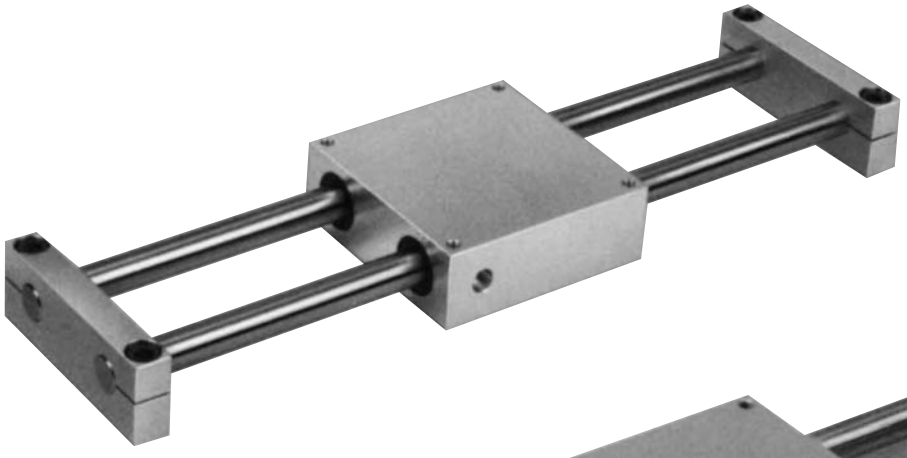

LZBU

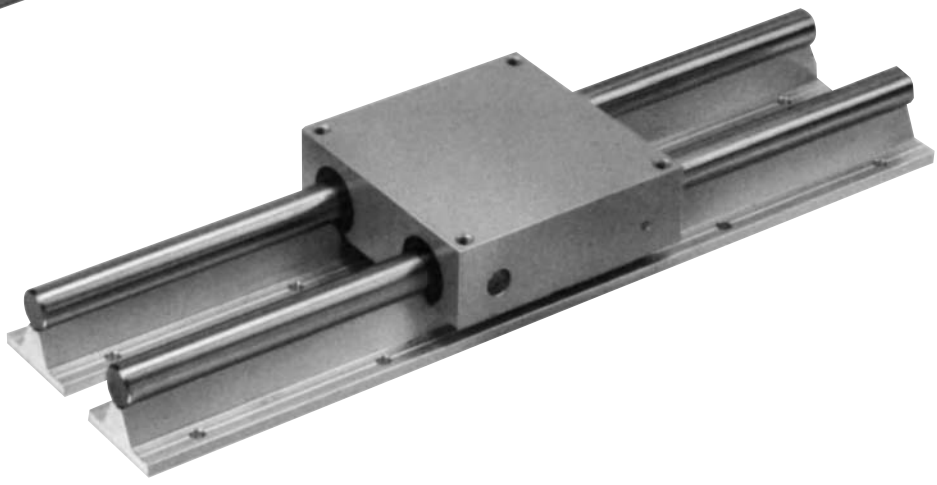

LZAU

Quadro linear tables – LZBU ... A

- LZBU version with LQCD closed bearing units, LEAS-A* shaft blocks and shafts

* "A" design means fixed shafts and moving unit

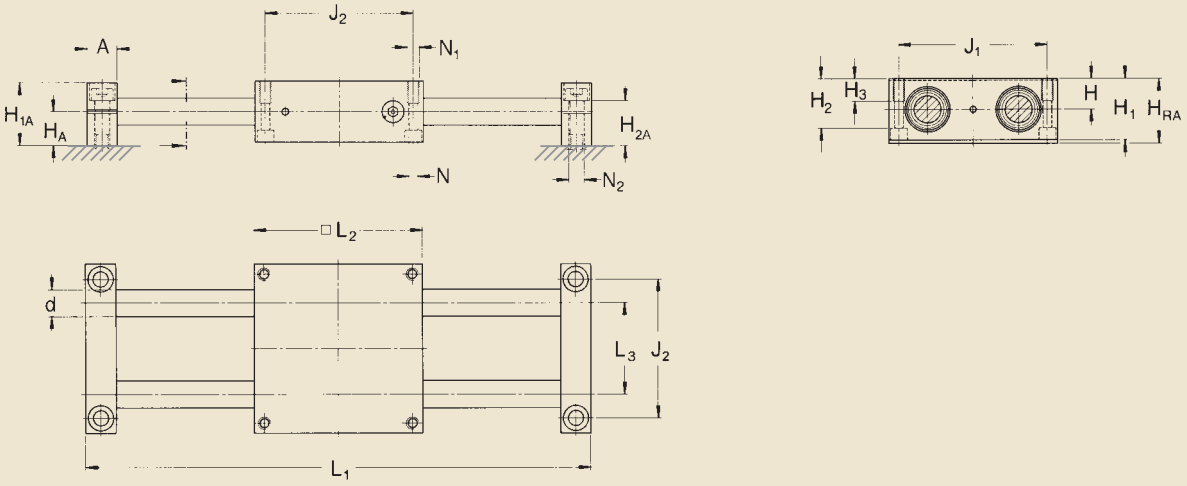

Design LZBU ... A with closed linear bearing unit

Dimensions																		Load ratings[4]		Designations[1]
d	A	H_{RA} ± 0,03	H_A ± 0,015	H_{1A}	H_{2A}	H ± 0,01	H_1	H_2	H_3	J_1	J_2	L_1[2]	L_2	L_3	N[3]	N_1[3]	N_2[3]	dyn C	stat. C_0	
mm																–	mm	N		–
8	12	24	12,5	23	16	11,5	23	17,5	11	55	52	600	65	32	4,3	M 5	5,5	1 290	1 420	LZBU 8 A-2LS[5]
12	14	34	18	32	23,5	16	32	25	13	73	70	900	85	42	5,3	M 6	6,6	2 850	3 250	LZBU 12 A-2LS
16	18	38	20	37	26,5	18	36	29	13	88	82	1 500	100	54	5,3	M 6	9	3 450	3 450	LZBU 16 A-2LS
20	20	48	25	46	32,5	23	46	37,5	18	115	108	1 800	130	72	6,6	M 8	11	5 200	5 500	LZBU 20 A-2LS
25	25	58	30	56	40	28	56	45	22	140	132	1 800	160	88	8,4	M 10	13,5	7 650	8 150	LZBU 25 A-2LS
30	25	67	35	64	48	32	64	50,5	26	158	150	2 400	180	96	10,5	M 12	13,5	12 200	12 900	LZBU 30 A-2LS
40	30	84	44	80	59	40	80	64	34	202	190	3 000	230	122	13,5	M 16	17,5	20 800	20 800	LZBU 40 A-2LS
50	30	100	52	96	75	48	96	80	34	250	240	3 000	280	152	13,5	M 16	17,5	30 000	28 000	LZBU 50 A-2LS

[1] The designation for an LZBU quadro-linear table with a shaft length of, for instance, 1 200 mm LZBU ...-2LS x 1200. Delivered as a kit of parts.
[2] Recommended maximal shaft length. On demand longer shaft lengths are available. The appropiate length tolerances of these shafts are according to DIN 7168 coarse series.
[3] Suitable Screws with internal hexagon according to DIN 912 / ISO 4762.
[4] Valid only for even loading of all four LBC ... A linear ball bearings. On delivery the deviation of the shaft must be considered and possibly the load rating revised.
[5] Units fitted with LBCR linear ball bearings are not designed for relubrication and are not self-aligning.

Quadro linear tables – LZBU ... B

- LZBU version with LQCD closed bearing units, LEAS-B* shaft blocks and shafts

* "B" design means fixed unit and moving shafts

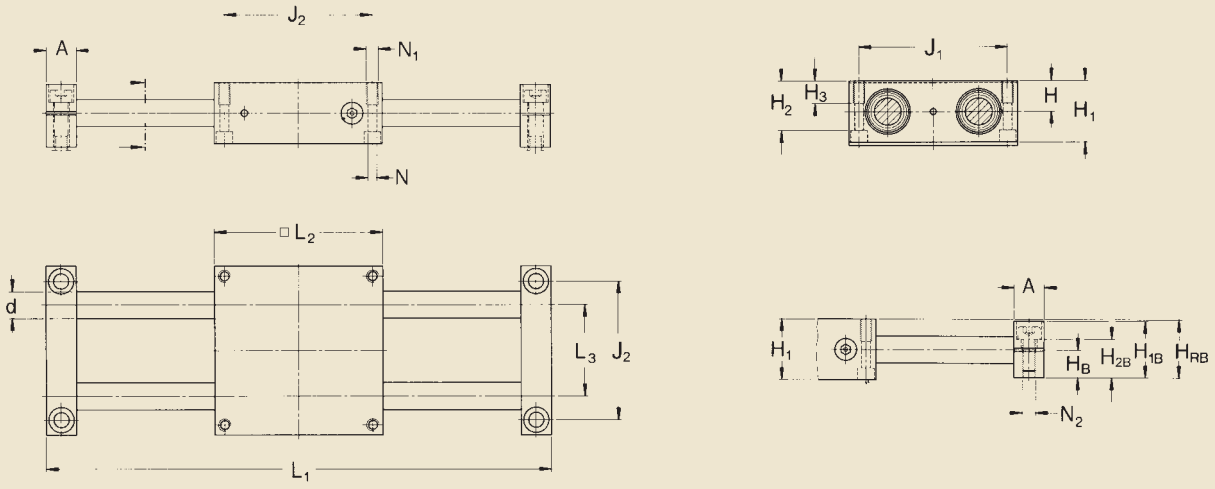

Design LZBU ... B with closed linear bearing unit

Dimensions																	Load ratings[4]		Designations[1]
d	A	H_{RB} ± 0,03	H_B ± 0,015	H_{1B}	H_{2B}	H ± 0,01	H_1	H_2	H_3	J_1	J_2	L_1[2]	L_2	L_3	N[3]	N_1[3]	N_2[3]	dyn C	stat. C_0	
mm																–	–	N		–
8	12	22,5	11	22	15	11,5	23	17,5	11	55	52	600	65	32	4,3	M 5	M 5	1 290	1 420	LZBU 8 B-2LS[5]
12	14	30	14	28	19,5	16	32	25	13	73	70	900	85	42	5,3	M 6	M 6	2 850	3 250	LZBU 12 B-2LS
16	18	35	17	34	23,5	18	36	29	13	88	82	1 500	100	54	5,3	M 6	M 8	3 450	3 450	LZBU 16 B-2LS
20	20	44	21	42	28,5	23	46	37,5	18	115	108	1 800	130	72	6,6	M 8	M 10	5 200	5 500	LZBU 20 B-2LS
25	25	54	26	52	36	28	56	45	22	140	132	1 800	160	88	8,4	M 10	M 12	7 650	8 150	LZBU 25 B-2LS
30	25	61	29	58	42	32	64	50,5	26	158	150	2 400	180	96	10,5	M 12	M 12	12 200	12 900	LZBU 30 B-2LS
40	30	76	36	72	51	40	80	64	34	202	190	3 000	230	122	13,5	M 16	M 16	20 800	20 800	LZBU 40 B-2LS
50	30	92	44	88	67	48	96	80	34	250	240	3 000	280	152	13,5	M 16	M 16	30 000	28 000	LZBU 50 B-2LS

[1] The designation for an LZBU quadro-linear table with a shaft length of, for instance, 1 200 mm LZBU ...-2LS x 1200. Delivered as a kit of parts.
[2] Recommended maximal shaft length. On demand longer shaft lengths are available. The appropiate length tolerances of these shafts are according to DIN 7168 coarse series.
[3] Suitable Screws with internal hexagon according to DIN 912 / ISO 4762.
[4] Valid only for even loading of all four LBC ... A linear ball bearings. On delivery the deviation of the shaft must be considered and possibly the load rating revised.
[5] Units fitted with LBCR linear ball bearings are not designed for relubrication and are not self-aligning.

Quadro linear tables – LZAU

- LZAU version with LQCF open bearing units and supported shafts

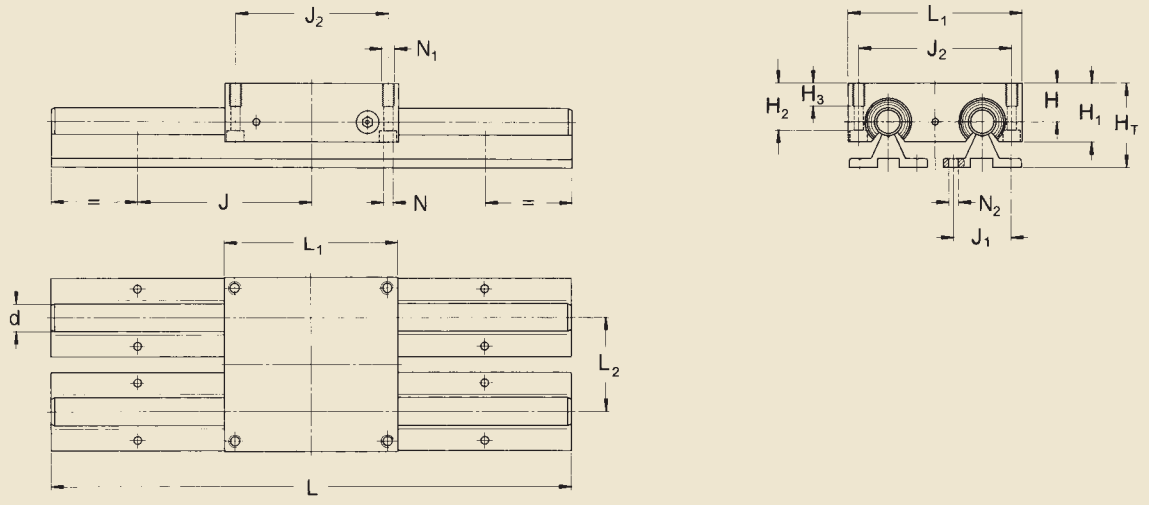

Design LZAU with open
linear bearing unit type LQCF

Dimensions														Load ratings[4]		Designations[1]
														dyn	stat.	
d	H_T ± 0,03	H	H_1	H_2	H_3 ± 0,01	J[3]	J_1	J_2	L_1	L_2	N[2]	N_1[2]	N_2[2]	C	C_0	
mm												–	mm	N		–
12	40	18	30	23,4	13	75	29	73	85	42	5,3	M 6	4,5	2 850	3 250	LZAU 12-2LS
16	48	22	35	28,4	13	100	33	88	100	54	5,3	M 6	5,5	3 450	3 450	LZAU 16-2LS
20	57	25	42	33,5	18	100	37	115	130	72	6,6	M 8	6,6	5 200	5 500	LZAU 20-2LS
25	66	30	51	40	22	120	42	140	160	88	8,4	M 10	6,6	7 650	8 150	LZAU 25-2LS
30	77	35	60	46,5	26	150	51	158	180	96	10,5	M 12	9	12 200	12 900	LZAU 30-2LS
40	95	45	77	61	34	200	55	202	230	122	13,5	M 16	9	20 800	20 800	LZAU 40-2LS
50	115	55	93	77	34	200	63	250	280	152	13,5	M 16	11	30 000	28 000	LZAU 50-2LS

Dimensions

Standard length

d	L									
mm		length increments in mm								
12-40	300	600	900	1 200	1 500	1 800	2 100	2 400	2 700	3 000
50	—	600	900	1 200	1 500	1 800	2 100	2 400	2 700	3 000

[1] The designation for an LZAU quadro-linear table with a shaft length of, for instance, 600 mm LZAU ... -2LS x 600.
Delivered with shafts and shaft supports ready assembled.
[2] Suitable Screws with internal hexagon according to DIN 912 / ISO 4762.
[3] The separation is allways arranged symmetrically to half the table length.
[4] Valid only for even loading of all four LBC ... A linear ball bearings.

Precision shafts

SKF precision shafts can be supplied either as solid or hollow shafts. Solid shafts are available in all dimensions required to fit SKF linear ball bearings; hollow shafts have a minimum outer diameter of 16 mm. They are induction hardened and ground (see table on next page). SKF shafts have exceptionally high dimensional stability and are designed for long service life.

The shaft ends of normal shaft production may deviate in hardness and dimension accuracy. For special applications, solid shafts of stainless steel or hard chromium plated shafts with a chromium coating of approximately 10 µm thickness can be supplied. Note that the surface of a stainless steel shaft is not as hard as the surface of a shaft made of high-grade steel. The case depth may also be greater than indicated in the table and this may have an influence on the machinability of the shafts. Because of the benefits they offer, SKF precision shafts are not only used together with SKF linear ball bearings for linear guides, but are also used for other applications like axles or column sleeves.

Materials

SKF precision shafts are made from non-alloyed high-grade steels Cf53 (Material No.1.1213), Ck53 (Material No.1.1210), Ck60 (Material No.1.1221) and 100Cr6 (Material No.12067). The surface hardness is between 60 and 64 HRC. Solid stainless steel shafts are made from X90CrMoV18 (Material No.1.4112) or X46Cr13 (Material No.1.4034). In this case the surface hardness lies between 52 and 56 HRC. Shafts made from other materials can be supplied to special order.

Surface finish

All SKF precision steel shafts have a surface roughness of max. R_a 0,3 µm.



Case hardening of SKF shafts

Shaft diameter over	incl	Hardness depth min
mm		mm
—	10	0,5
10	18	0,8
18	30	1,2
30	50	1,5
50	80	2,2
80	100	3,0

Tolerances

SKF precision steel shafts are machined to h6 or h7 tolerances. The accuracy of dimensions and form of these shafts can be found in the table on page 56. There may be slight deviations from the values provided in the tables for sections of the shaft that have been annealed. SKF precision steel shafts with diameters machined to tolerance h9 can be supplied to special order. Shafts cut to special lengths have a length tolerance to ISO 2768 medium class. The relevant values are provided in the adjacent table.

Shafts with radial holes

For linear guides requiring support, shafts with threaded radial holes are needed. These can be supplied by SKF. The radial holes may be either positioned to fit SKF shaft supports or as specified on the customer's drawings. However, SKF recommends using the guideline values provided in the adjacent table for thread size and depth. SKF shafts with radial holes are not annealed at the drilling position; the thread is cut in the case hardened and ground shaft to avoid any changes in hardness or dimensional accuracy.

Composite shafts

Composite shafts can be supplied to customer drawings, either with screwed joints or with "plug and socket" joints, depending on the application. Accurately centred trunnions and sockets provide smooth transitions at the butt joint. To enable correct assembly, the relative positions of the shaft sections and shaft ends are marked. Composite shafts should be fastened to a support at the butt joints, particularly when "plug and socket" joints are used. When drilling radial holes for the supports, drill as close as possible to the joint.

Note: the length of the shaft and the positioning of the supports should be determined so that any bending of the shaft will not cause a gap to form at the joint.

Length tolerances for shafts to ISO 2768 medium class

Nominal length over	incl	Deviation
mm		mm
—	120	± 0,3
120	400	± 0,5
400	1 000	± 0,8
1 000	2 000	± 1,2
2 000	4 000	± 2
4 000	8 000	± 3

Corrosion protection, packing

SKF precision steel shafts are treated with a rust inhibiting preservative that must be removed before the shafts are installed. Depending on size and quantity, they are supplied in cardboard or wooden boxes that offer maximum protection during transport.

Standard length of the shafts[1]

SKF precision steel shafts are available in following length

Shaft diameter	Maximal length[2]				
	LJM[3]	LJMH[3]	LJMS[3]	LJMR[3]	LJT[3]
mm	mm				
3[4]				200	
4[4]				200	
5	3 900	2 000	1 000	3 800	
6	6 000	3 900	3 900	3 800	
8	6 200	3 900	3 900	3 800	
10	6 200	6 200	3 900	3 800	
12	6 200	6 200	4 900	7 800	6 000
14	6 200	6 200	4 900	7 800	
16	7 200	7 200	4 900	7 800	6 000
20	7 200	7 200	4 900	7 800	6 000
25	7 800	7 800	4 900	7 800	6 000
30	7 800	7 800	4 900	7 800	6 000
40	7 800	7 800	4 900	7 800	6 000
50	7 800	7 800	4 900	7 800	6 000
60	7 800	7 800	4 900	7 800	6 000
80	7 800	7 800			6 000

[1] Different diameters and length on request
[2] length tolerance ±10 % (based on maximum shaft length)
[3] for details see page 56/57
[4] only available as ESSC 2 see page 54

Shafting standard – ESSC

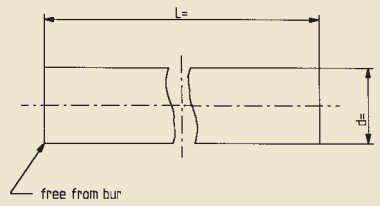

ESSC 1

cut with no chamfer only deburr

- length tolerance according to ISO 2768 medium class (see page 53)

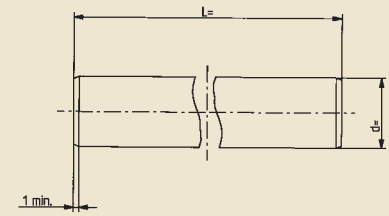

ESSC 2

cut with chamfer

- length tolerance as ESSC 1

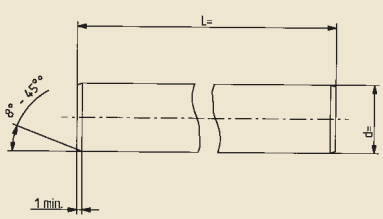

ESSC 3

cut with machined 25° chamfer and 90° front surfaces for limited length tolerance or chamfer according to customer specification

- length tolerance +/- 0,1 mm up to 3 000 mm total length

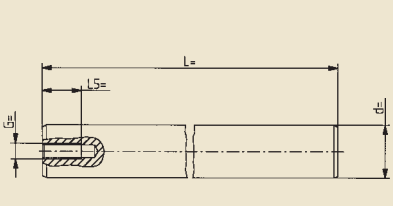

ESSC 4

cut with machined 25° chamfer, 90° front surfaces and one axial hole

- length tolerance as ESSC 3

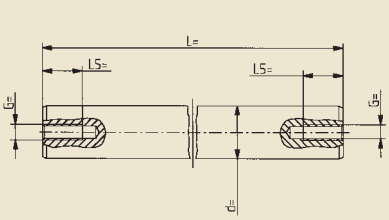

ESSC 5

as ESSC 4 with two axial holes

Dimensions of front side thread (ESSC 4 & ESSC 5)

Ø (d)	Thread (G)	Depth (L5)
5	-	-
8	M4	10
10	M4	10
12	M5	12,5
14	M5	12,5
16	M6	15
20	M8	20
25	M10	25
30	M10	25
40	M12	30
50	M16	40
60	M20	50
80	M24	60

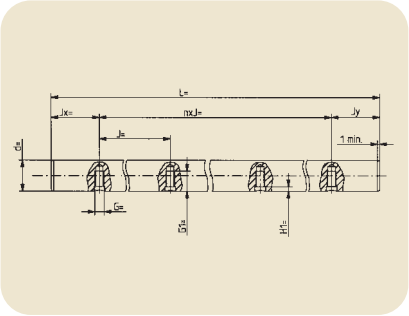

ESSC 6

cut and chamfer as ESSC 2

- with radial holes for LRCB (see page 47)
- first radial hole with Jx = J/2
- H1 according to hardness depth

Dimensions of radial thread

Ø	Thread	G	G1	J	Jx
5	-	-	-	-	-
8	-	-	-	-	-
12	M4	5	8	75	37,5
16	M5	6	9,5	100	50
20	M6	7	13	100	50
25	M8	9	14	120	60
30	M10	11	18	150	75
40	M10	11	20	200	100
50	M12	13	23	200	100
60	M14	15	28	300	150
80	M16	16	33	300	150

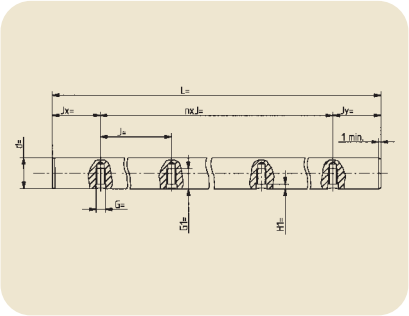

ESSC 7

as ESSC 6

- radial holes with J and Jx according to customer specification

Ø	Thread	G	G1	J	Jx
5	-	-	-	-	-
8	-	-	-	-	-
12	M4	5	8	-	
16	M5	6	9,5	-	-
20	M6	7	13	-	-
25	M8	9	14	-	-
30	M10	11	18	-	-
40	M10	11	20	-	-
50	M12	13	23	-	-
60	M14	15	28	-	-
80	M16	16	33	-	-

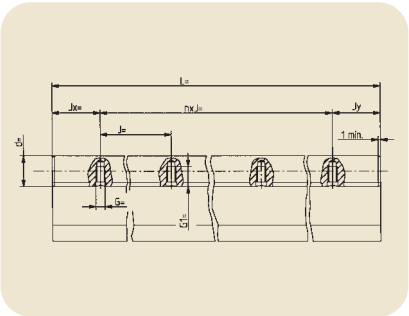

ESSC 8

cut and chamfer as ESSC 2

- Shaft is mounted on LRCB (see page 47)
- first radial hole with Jx = J/2
- H1 according to hardness depth

Ø	Thread	G	G1	J	Jx
5	-	-	-	-	-
8	-	-	-	-	-
12	M4	5	8	75	37,5
16	M5	6	9,5	100	50
20	M6	7	13	100	50
25	M8	9	14	120	60
30	M10	11	18	150	75
40	M10	11	20	200	100
50	M12	13	23	200	100
60	M14	15	28	300	150
80	M16	16	33	300	150

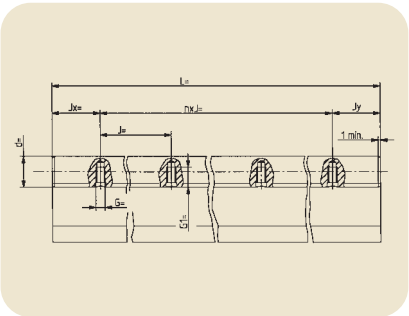

ESSC 9

as ESSC 8

- Shaft is mounted on LRCC (see page 47)
- radial holes with J and Jx according to customer specification

Ø	Thread	G	G1	J	Jx
5	-	-	-	-	-
8	-	-	-	-	-
12	M4	5	8	-	-
16	M5	6	9,5	-	-
20	M6	7	13	-	-
25	M8	9	14	-	-
30	M10	11	18	-	-
40	M10	11	20	-	-
50	M12	13	23	-	-
60	M14	15	28	-	-
80	M16	16	33	-	-

ESSC 10, shaft according to customer specification / drawings

Precision shafts

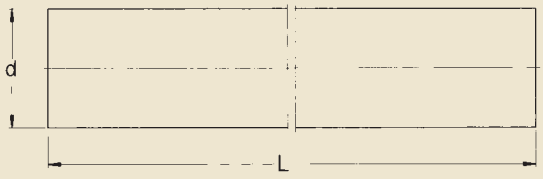

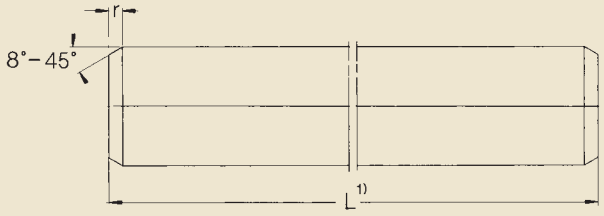

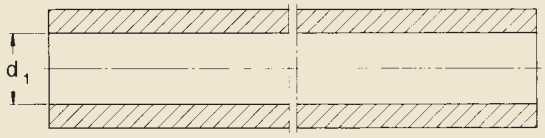



Standard designs for fixed length without chamfer

Standard designs for fixed length with chamfer

Dimension			Mass		Moment of inertia		Cross sectional area		Designations				
			Solid shaft	Hollow shaft	Solid shaft	Hollow shaft	Solid shaft	Hollow shaft	Solid shafts of precision steel	Solid shafts of stainless steel X90CrMoV18	X46Cr13	Solid shafts with high grade steel hard chromium plated	Hollow shaft high grade steel
d	d_1	r_{min}											
mm			kg/m		cm^4		mm^2						
3	—	0,4	0,06	—	0,0004	—	7,1	—		LJMR 3			
4	—	0,4	0,1	—	0,0013	—	12,6	—		LJMR 4			
5	—	0,8	0,15	—	0,0031	—	19,6	—	LJM 5	LJMR 5	LJMS 5	LJMH 5	
6		0,8	0,22	—	0,0064	—	28,3	—	LJM 6	LJMR 6	LJMS 6	LJMH 6	
8	—	0,8	0,39	—	0,020	—	50,3	—	LJM 8	LJMR 8	LJMS 8	LJMH 8	
10	—	0,8	0,62	—	0,049	—	78,5	—	LJM 10	LJMR 10	LJMS 10	LJMH 10	
12	4	1	0,89	0,79	0,102	—	113	—	LJM 12	LJMR 12	LJMS 12	LJMH 12	LJT 12
14	—	1	1,21	—	0,189	—	154	—	LJM 14	LJMR 14	LJMS 14	LJMH 14	
16	7	1	1,58	1,28	0,322	0,310	201	163	LJM 16	LJMR 16	LJMS 16	LJMH 16	LJT 16
20	14	1,5	2,47	1,25	0,785	0,597	314	160	LJM 20	LJMR 20	LJMS 20	LJMH 20	LJT 20
25	16	1,5	3,86	2,35	1,92	1,64	491	305	LJM 25	LJMR 25	LJMS 25	LJMH 25	LJT 25
30	18	1,5	5,55	3,5	3,98	3,46	707	453	LJM 30	LJMR 30	LJMS 30	LJMH 30	LJT 30
40	28	2	9,86	4,99	12,6	9,96	1 260	685	LJM 40	LJMR 40	LJMS 40	LJMH 40	LJT 40
50	30	2	15,4	9,91	30,7	27,7	1 960	1 350	LJM 50	LJMR 50	LJMS 50	LJMH 50	LJT 50
60	36	2,5	22,2	14,2	63,6	57,1	2 830	1 920	LJM 60	LJMR 60	LJMS 60	LJMH 60	LJT 60
80	57	2,5	39,5	19,43	201	153	5 030	2 565	LJM 80			LJMH 80	LJT 80

Attention:
d_1 can deviate from the value quoted. Please enquire if necessary.
Different shaft diameters and types on request.
The static load capacity has to be decreased by 8 % and the dynamic load capacity by 18 % when using the non corrosion types (HV6) in conjunction with precision steel shafts made of stainless steel.

[1] **Shafts cut to special length with chamfered ends.** The length tolerance of these shafts corresponds to LJM 20x1500 ESSC2 medium class. The designation for a shaft with 20 mm diameter cut to a length of 1,5 m is, for example, LJM 20x1500 ESSC2.

Precision shafts of high-grade steel

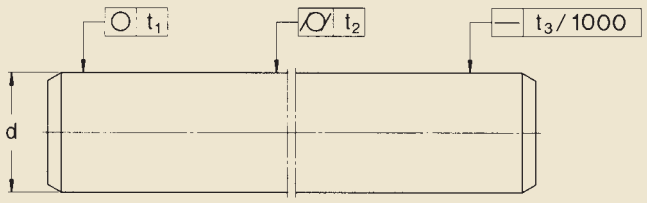

Shaft	Accuracy of dimension and form									
Nominal diameter	Shafts to tolerance h6					Shafts to tolerance h7				
	Diameter deviation		Round-ness	Cylindri-city	Straight-ness[1]	Diameter deviation		Round-ness	Cylindri-city	Straight ness[1]
d	high	low	t_1	t_2	t_3	high	low	t_1	t_2	t_3
mm	µm									
3	0	-6	3	4	150	0	-10	4	6	150
4	0	-8	4	5	150	0	-12	5	8	150
5	0	-8	4	5	150	0	-12	5	8	150
6	0	-8	4	5	150	0	-12	5	8	150
8	0	-9	4	6	120	0	-15	6	9	120
10	0	-9	5	7	120	0	-15	7	10	120
12	0	-11	5	8	100	0	-18	8	11	100
14	0	-11	5	8	100	0	-18	8	11	100
16	0	-11	5	8	100	0	-18	8	11	100
20	0	-13	6	9	100	0	-21	9	13	100
25	0	-13	6	9	100	0	-21	9	13	100
30	0	-13	6	9	100	0	-21	9	13	100
40	0	-16	7	11	100	0	-25	11	16	100
50	0	-16	7	11	100	0	-25	11	16	100
60	0	-19	8	13	100	0	-30	13	19	100
80	0	-19	8	13	100	0	-30	13	19	100

[1] Shafts with higher precision on request.

Notes

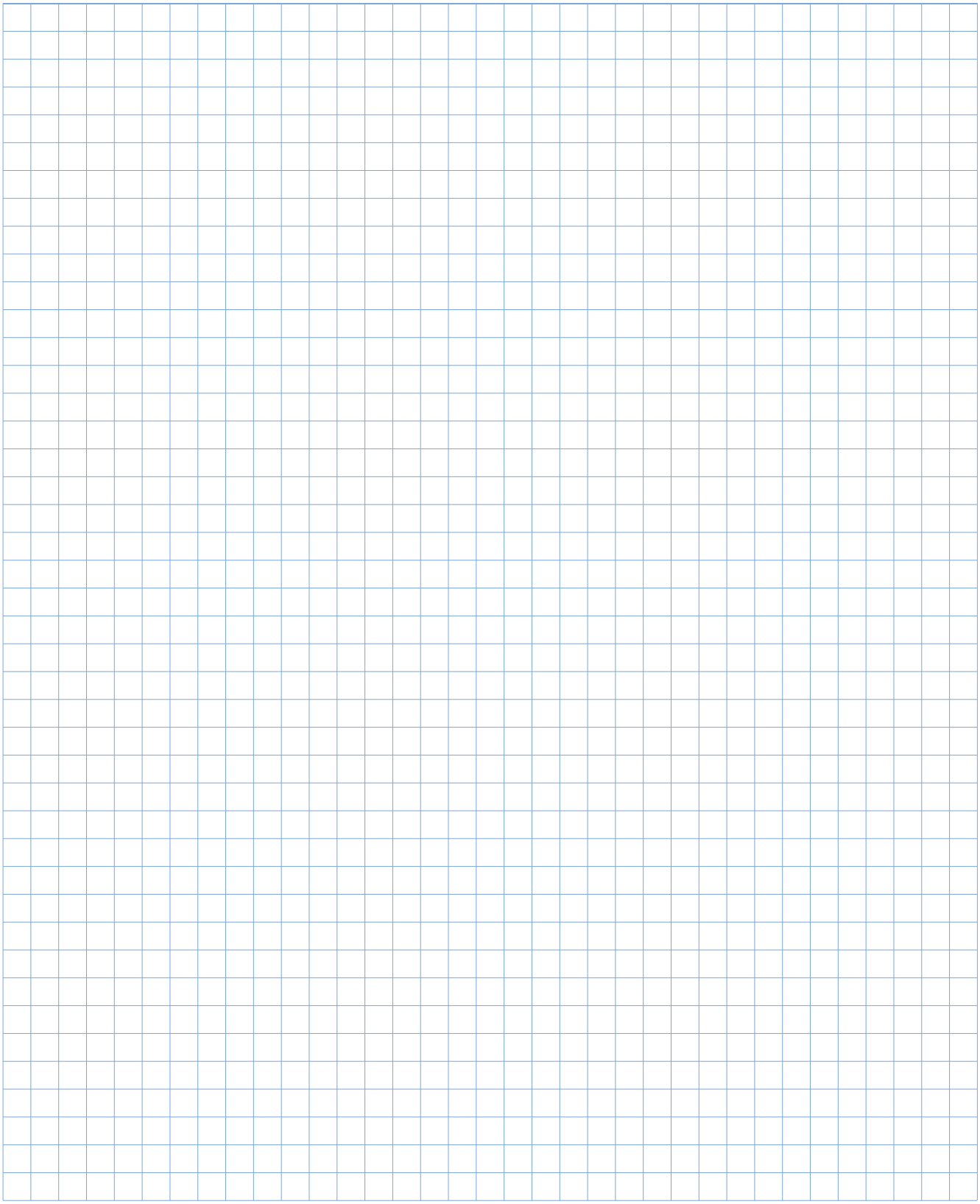

Notes







Contacts

Linear motion from SKF
www.linearmotion.skf.com

Benelux
SKF Multitec Benelux B.V.
Nederland
Tel +31 030 6029 029
Fax +31 030 6029 028

België & Luxembourg
Tel +32 25 024 270
Fax +32 25 027 336
E-mail multitec_benelux@skf.com

Brasil
SKF do Brasil Ltda
Tel +55 11 461 991 114
Fax +55 11 461 991 99
E-mail marketing.skf@skf.com.br

Canada
SKF Canada Limited
Tel +1 416 299 1220
Fax +1 416 299 6548
E-mail www.marketing@skf.ca

Danmark
SKF Multitec
Tel +45 65 92 77 77
Fax +45 65 92 74 77
E-mail customerservice.multitec@skf.com

Deutschland & Österreich
SKF Linearsysteme GmbH
Tel +49 9721 657 232/233
Fax +49 9721 657 111
E-mail lin.sales@skf.com

España & Portugal
SKF Productos Industriales S.A.
Tel +34 93 377 99 07/-77
Fax +34 93 474 2039/-2156
E-mail prod.ind@skf.com

France
SKF Equipements
Tel +33 1 30 12 73 00
Fax +33 1 30 12 69 09
E-mail equipements.france@skf.com

Italia
SKF Multitec S.p.A.
Tel +39 011 22 49 01
Fax +39 011 22 49 233
E-mail multitec.italy@skf.com

Mexico
SKF de México S.A. de C.V
Tel +52 222 229 4900
Fax +52 222 229 4908
Web www.skf.com.mx

Norge
SKF Multitec
Tel +47 22 90 50 00
Fax +47 22 30 28 14
E-mail customerservice.multitec@skf.com

Schweiz
SKF LM&PT
Tel +41 44 825 81 81
Fax +41 44 825 82 82
E-mail skf.schweiz@skf.com

Suomi
SKF Multitec
Tel +358 9 615 00 850
Fax +358 9 615 00 851
E-mail multitec.nordic@skf.com

Sverige
SKF Multitec
Tel +46 42 253 500
Fax +46 42 253 545
E-mail customerservice.multitec@skf.com

U.K.
SKF (UK) Ltd.
Tel +44 1582 496 735
Fax +44 1582 496 574
E-mail a&mc.uk@skf.com

USA
SKF Motion Technologies
Tel +1 610 861 3700
Toll free +1 800 541 3624
Fax +1 610 861 3716
E-mail motiontech.usa@skf.com

Other countries
Fax +49 972 657 118
E-mail guidings@skf.com

Represented by:

© SKF is a registered trademark of the SKF Group.

SKF 2006
The contents of this publication are the copyright of the publisher and may not be reproduced (even extracts) unless prior written permission is granted. Every care has been taken to ensure the accuracy of the information contained in this publication but no liability can be accepted for any loss or damage whether direct, indirect or consequential arising out of the use of the information contained herein.

Publication 4182EN - 0608B Printed in Germany